acciaio inox microfuso - elevato rendimento - casted stainless steel - high efficiency

PANELLI®

italian excellence since 1906

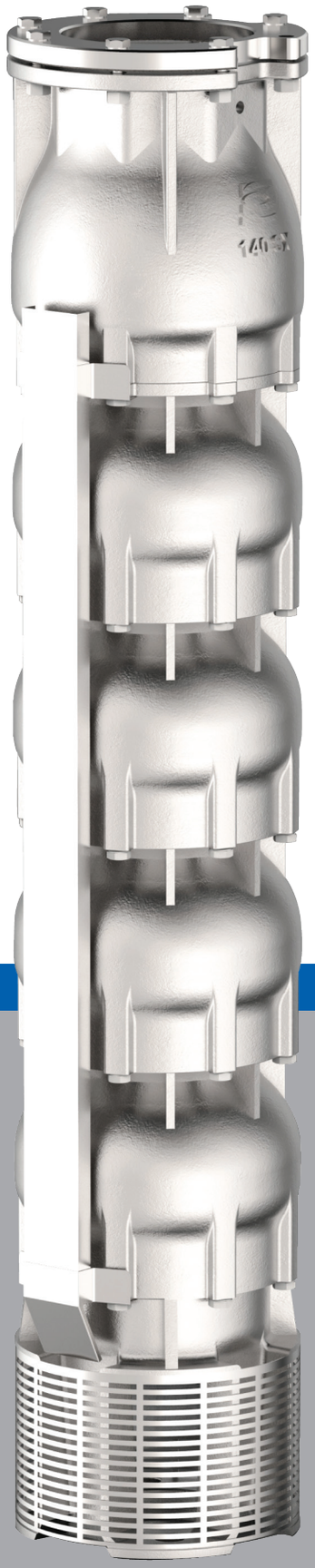

6" 8" 10" 12"

140 SX - 180 SX
230 SX - 270 SX

50Hz

POMPA SOMMERSA SEMIASSIALE INOX

SEMIAXIAL SUBMERSIBLE PUMP - INOX

Casted

MADE IN ITALY

6" 8" 10" 12"

140 SX
180 SX
230 SX
270 SX

50Hz

POMPA SOMMERSA SEMIASSIALE INOX
SEMIAXIAL SUBMERSIBLE PUMP - INOX

Casted

Pompa semiassiale in acciaio inossidabile microfuso

Casted stainless steel semiaxial pump

Pompe semiaxiale en acier inoxydable - coulé

Bomba semiaxial en acero inoxydable microfundido

Disponbile in: AISI 304 - AISI 316 - Duplex

Available in: AISI 304 - AISI 316 - Duplex

Disponible en: AISI 304 - AISI 316 - Duplex

Disponibilidad en: AISI 304 - AISI 316 - Duplex

PANELLI®

italian excellence since 1906

Tolleranza alla sabbia 50 g/m^3 - sand tolerance 50 g/m^3
Tolleranze secondo UNI ISO 9906 livello 3B - Tolerances according to UNI ISO 9906 grade 3B

acciaio inox microfuso - elevato rendimento - casted stainless steel - high efficiency

PANELLI®

italian excellence since 1906

6" 8" 10" 12"

140 SX
180 SX
230 SX
270 SX

50Hz

POMPA SOMMERSA SEMIASSIALE INOX
SEMIAXIAL SUBMERSIBLE PUMP - INOX

Casted

Girante e diffusore in acciaio inossidabile AISI 304 microfuso

Casted stainless steel impeller and diffuser AISI 304

Roue et diffuseur en acier inoxydable -coulé AISI 304

Rodete y difusor en acero inoxydable microfundido AISI 304

Robustezza ineguagliabile	Rendimento ai vertici del settore 77% - 81% - massima efficienza energetica
Heavy Duty construction	*Superior efficiency: 77% - 81 % High Energy Saving*
Durabilité	Rendement superieur: 77% - 81% Eficacité énergetique trés élevée
Durabilidad	*Rendimiento superior: 77% - 81% Maxima eficiencia energetica*

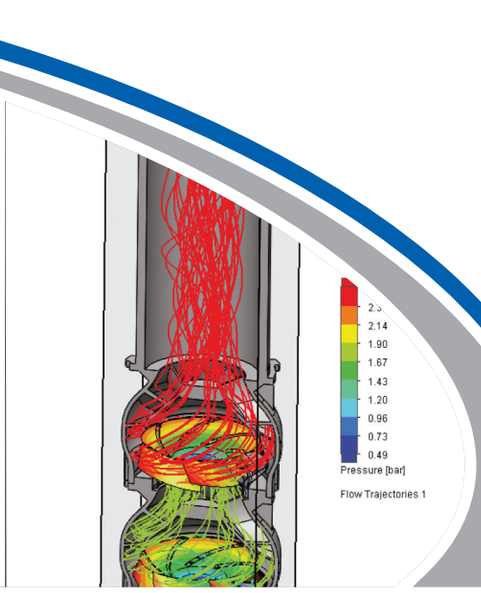

PANELLI®

italian excellence since 1906

6" 8" 10" 12"

140 SX
180 SX
230 SX
270 SX

50Hz

POMPA SOMMERSA SEMIASSIALE INOX
SEMIAXIAL SUBMERSIBLE PUMP - INOX

Casted

ELETTROPOMPE SOMMERSE SEMIASSIALI 6"/8"/10"/12" SERIE 140/180/230/270 SX, IN ACCIAIO INOX MICROFUSO AISI 304
Le pompe sommerse semiassiali sono caratterizzate da stadi formati dal corpo diffusore incorporato e girante semi-assiale. Questo tipo di soluzione, rispetto a quella radiale, è ideale quando sono richieste a parità di diametro, medio-alte portate, con medie prevalenze.
Adatte a sollevamento di acqua pulita, per approvvigionamento idrico ad uso civile ed industriale, impianti di pressurizzazione, antincendio ed irrigazione, acquedotti.

VANTAGGI
Progetto innovativo (L'acciaio inox AISI 304 ottenuto con il processo di microfusione permette di ottenere) :
- rendimenti elevati
- notevole durate nel tempo (minore usura)
- facilità di smontaggio
- ridotta manutenzione - bassi costi di esercizio

MATERIALI
- Girante, diffusore , gabbia di aspirazione e corpo valvola in acciaio inox Aisi 304 microfuso
- Albero pompa in acciaio inox Aisi 304
- Anelli di usura, bronzine, guarnizione valvola in gomma NBR
- Anello di controspinta in PTFE+25% GRAFITE)

CAMPI DI PRESTAZIONE IDRAULICHE
- Portate fino a 543 m^3/h, Prevalenze fino a 470 metri, Potenze fino a 350 kW
- Massima quantità di sabbia ammessa : 50g/m^3
- Massima profondità di immersione : 350 metri

6"/8"/10"/12" SUBMERSIBLE SEMIAXIAL PUMPS SERIES 140/180/230/270 SX, IN AISI 304 CASTED STAINLESS STEEL
Semiaxial submersible pumps thanks to the design of impellers and diffusers are suitable for mid-high capacities up to mid Head values.
Suitable for clean water supply in domestic, industrial, pressure boosters, firefighting systems, irrigation and water system networks.

ADVANTAGES
Panelli innovative design and the most advanced micro casting technologies allow:
- High efficiency
- Longer life
- Easy assembly/ disassembly
- Low maintenance
- Low operating cost

MATERIALS
- Impellers, diffusers, suction cage and delivery bowl in AISI 304 casted stainless steel
- Pump shaft in AISI 304 stainless steel
- Wear rings, bearing buses, valve seal in NBR
- Counter thrust in PTFE+25% GRAFITE

HYDRAULIC PERFORMANCES
- Capacity up to 543 m^3/h, Head up to 470 m, Power up to 350 kW
- Maximum sand tolerance : 50g/m^3
- Maximum depth : 350 metres

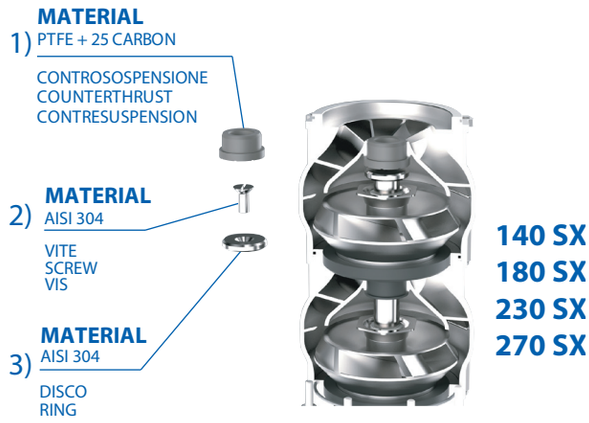

Tolleranza alla sabbia 50 g/m^3 - sand tolerance 50 g/m^3
Tolleranze secondo UNI ISO 9906 livello 3B - Tolerances according to UNI ISO 9906 grade 3B

PANELLI®

italian excellence since 1906

6" 8" 10" 12"

140 SX
180 SX
230 SX
270 SX

50Hz

POMPA SOMMERSA SEMIASSIALE INOX
SEMIAXIAL SUBMERSIBLE PUMP - INOX

Casted

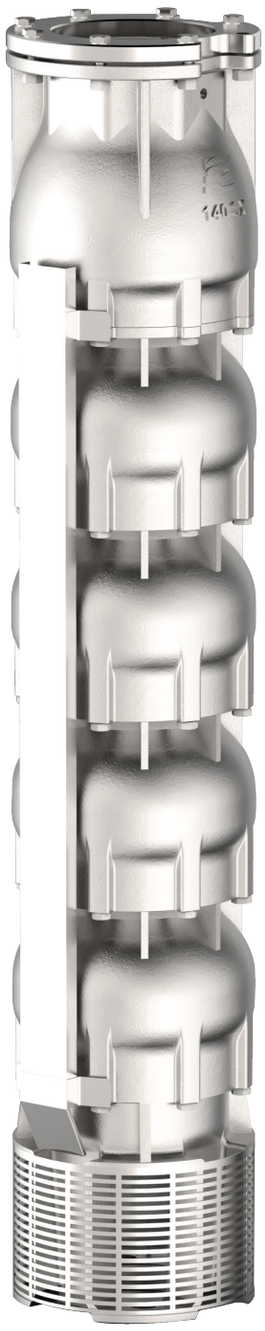

POMPES IMMERGÉES SEMIAXIALES 6"/8"/10"/12" SERIE 140/180/230/270 SX, EN ACIER INOXYDABLE AISI 304 MICROFUSION

Les pompes immergées semiaxiales grâce au design des roues et des diffuseurs peuvent produire des débit moyens-élevés et des hauteurs moyennes. Les pompes sont conçues pour des eaux claires dans toutes applications domestiques, industrielles, systèmes de surpression, groupe incendie, irrigation et réseaux d'eau publiques.

ADVANTAGES

L'innovatif projet Panelli et les technologies de microfusion les plus modernes permettent d'obtenir:
- Très hautes efficiences
- Durée de vie importante
- Facilité de montage et démontage
- Manutention réduite
- Couts d'exercice réduits

MATERIAUX

- Roues, diffuseurs, cage d'aspiration et refoulement en axier inoxydable AISI 304 en coulé
- Axe de la pompe en acier inoxydable AISI 304
- Bagues d'usure, bagues, anneau du clapet en caoutchouc NBR
- Contresuspension en PTFE+25% GRAFITE

PERFORMANCES HYDRAULIQUES

Débit jusqu'à 543 m^3/h, Hauteur jusqu'à 470 m, Puissance jusqu'à 350 kW
Tolerance de sable maximum : 50 g/m^3
Profondité maximum d'immersion : 350 métres

BOMBAS SUMERGIBLES SEMIAXIALES 6"/8"/10"/12" SERIE 140/180/230/270 SX, EN ACERO INOXYDABLE AISI 304 MICROFUNDIDO

Las bombas sumergibles semiaxiales gracias al diseño de los impulsores y de los cuerpos se adaptan a caudales medio-elevados y alturas media. Concebidas para el bombeo de aguas limpias en aplicaciones civiles e industriales para el suministro de agua a nivel domestico, industrial, en grupos de pression, systemas contra incendio, riego y sistemas de agua publica.

VENTAJAS

El diseño innovativo Panelli y las tecnologias de microfusion mas modernas garantizan:
- Eficiencias elevadas
- Durada de vida muy importante
- Facilidad de montaje y desmontaje
- Manutencion minima
- Costos de utilizacion muy limitados

MATERIALES

- Impulsores, difusores, caja de aspiracion e impulsion en acero inoxydable AISI 304 microfundido
- Eje de bomba en acero inoxidable AISI 304
- Anillos de desgaste, buje y anillo valvula en goma NBR
- Contrasuspension en PTFE+25% GRAFITE

PRESTACIONES HIDRAULICAS

Caudales hasta 543 m^3/h, Altura manometrica hasta 470 m, Potencia hasta 350 kW
Cantidad mãx de arena contenida en el agua: 50g/m^3, Sumergencia mãx: 350 metros

Tolleranza alla sabbia 50 g/m^3 - sand tolerance 50 g/m^3
Tolleranze secondo UNI ISO 9906 livello 3B - Tolerances according to UNI ISO 9906 grade 3B

acciaio inox microfuso - elevato rendimento - casted stainless steel - high efficiency

6" 140 SX34

PANELLI®

CARATTERISTICHE IDRAULICHE - HYDRAULIC PERFORMANCES

Q= Portata - Capacity - Debit **50 Hz n= 2900 min**

Tipo Type	Power kW	Power HP	l/min	0	300	400	500	600	700	800
			l/sec	0	5	6,67	8,33	10	11,67	13,33
			m^3/h	0	18	24	30	36	42	48
140 SX 34/03	4	5,5	H(m)	43	38	36	34	31	26	20
140 SX 34/04	5,50	7,5		57	51	48	45	41	35	27
140 SX 34/05	7,50	10		72	64	60	57	51	44	34
140 SX 34/06	9,20	12,5		86	76	72	68	61	52	41
140 SX 34/07	9,20	12,5		100	89	84	79	71	61	48
140 SX 34/08	11	15		114	102	96	90	82	70	54
140 SX 34/09	13	17,5		129	114	108	102	92	78	61
140 SX 34/10	15	20		143	127	120	113	102	87	68
140 SX 34/11	15	20		157	140	132	124	112	96	75
140 SX 34/12	18,50	25		172	152	144	136	122	104	82
140 SX 34/13	18,50	25		186	165	156	147	133	113	88
140 SX 34/14	22	30		200	178	168	158	143	122	95

DIMENSIONI D'INGOMBRO E PESI - OVERALL DIMENSIONS AND WEIGHTS

Type	**A** mm Tri V 400	**B** mm	**C** mm Tri	**M** Kg Tri	**P** Kg
140 SX 34/03	1193	596	597	22	16
140 SX 34/04	1395	697	698	27	20
140 SX 34/05	1616	798	818	32	23
140 SX 34/06	1650	899	751	60	27
140 SX 34/07	1751	1000	751	60	30
140 SX 34/08	1912	1101	811	65	33
140 SX 34/09	2043	1202	841	70	37
140 SX 34/10	2234	1303	931	75	40
140 SX 34/11	2335	1404	931	75	44
140 SX 34/12	2496	1505	991	83	47
140 SX 34/13	2597	1606	991	83	51
140 SX 34/14	2778	1707	1071	92	54

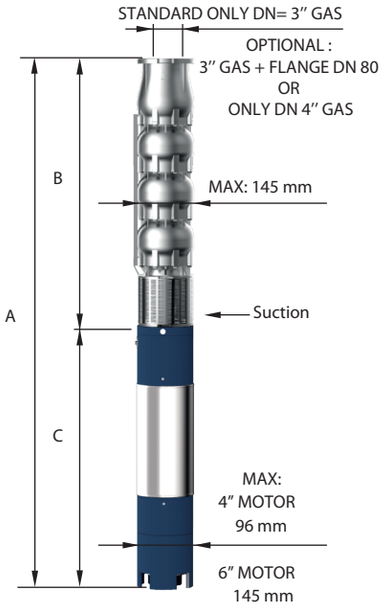

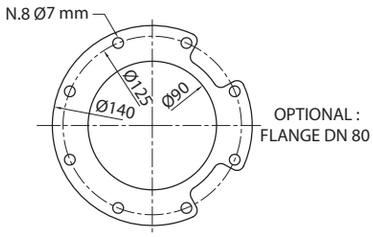

FOR COMMERCIAL TUBE
EXTERNAL DIAMETER: 88,9 mm

n% = Rendimento della pompa
n% = Rendement de la pompe
n% = Pump efficiency
n% = Rendimiento de la bomba

Max 76%

kW/st = Assorbimento per stadio
kW/st = Absorption par étage
kW/st = Stage absorption
kW/st = Potencia absorbida por etapa

Max 1,33

Tolleranza alla sabbia 50 g/m³ - Sand tolerance 50 g/m³ - Compatibilità con acqua potabile DM 174 Drinking water compatibility according to DM 174
Tolleranze secondo UNI ISO 9906 livello 3B - Tolerances according to UNI ISO 9906 grade 3B

PANELLI®

6"

140 SX34

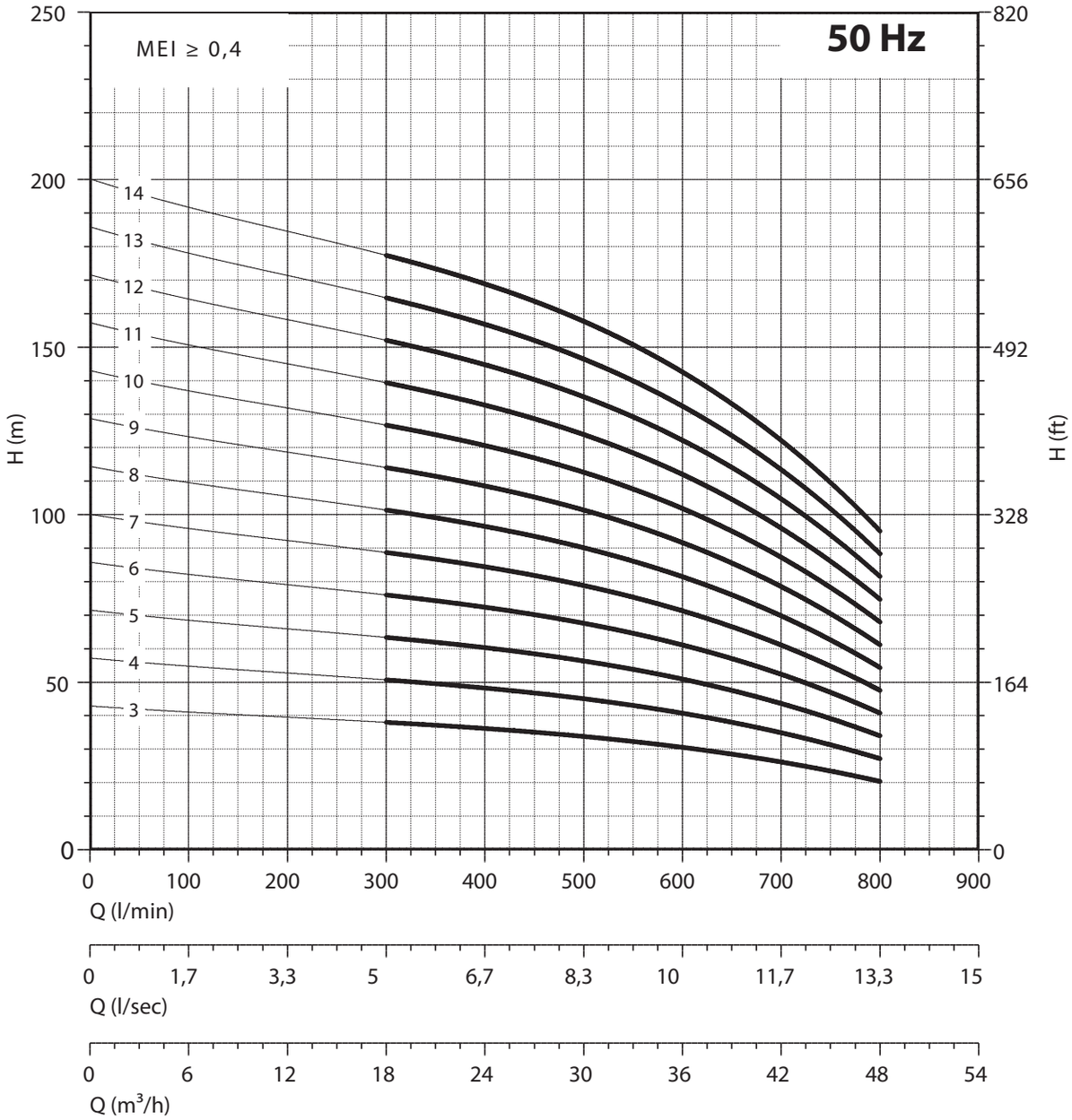

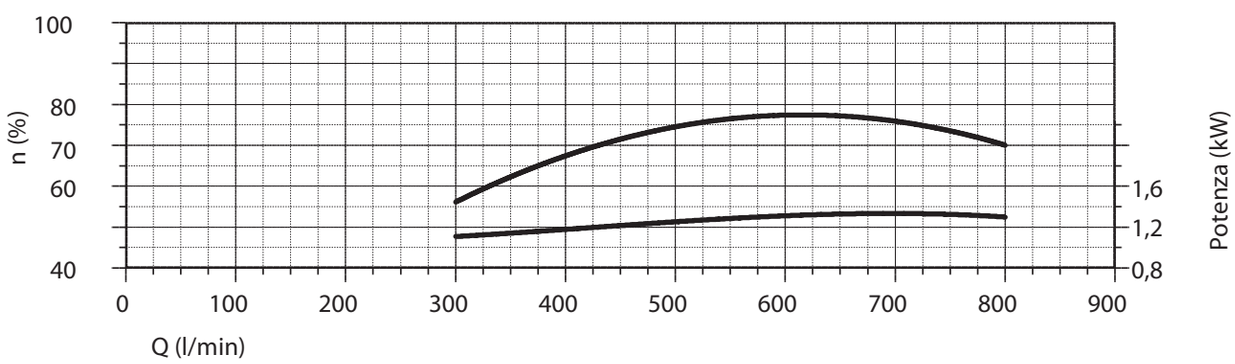

NPSH (m)	25%	50%	75%	100%
140 SX 34	3,4	3,4	3,8	8

6" 140 SX34

PANELLI®

CARATTERISTICHE IDRAULICHE - HYDRAULIC PERFORMANCES

Q= Portata - Capacity - Debit **50 Hz n= 2900 min**

Tipo Type	Power kW	Power HP	l/min	0	300	400	500	600	700	800
			l/sec	0	5	6,67	8,33	10	11,67	13,33
			m^3/h	0	18	24	30	36	42	48
140 SX 34/15	22	30	H(m)	215	191	180	170	153	131	102
140 SX 34/16	22	30		229	203	192	181	163	139	109
140 SX 34/17	26	35		243	216	204	192	173	148	116
140 SX 34/18	26	35		257	229	216	203	184	157	122
140 SX 34/19	26	35		272	241	228	215	194	165	129
140 SX 34/20	30	40		286	254	240	226	204	174	136
140 SX 34/21	30	40		300	267	252	237	214	183	143
140 SX 34/22	30	40		315	279	264	249	224	191	150
140 SX 34/23	37	50		329	292	276	260	235	200	156
140 SX 34/24	37	50		343	305	288	271	245	209	163
140 SX 34/25	37	50		358	318	300	283	255	217	170
140 SX 34/26	37	50		372	330	312	294	265	226	177
140 SX 34/27	37	50		386	343	324	305	275	235	184

DIMENSIONI D'INGOMBRO E PESI - OVERALL DIMENSIONS AND WEIGHTS

Type	A mm Tri V 400	B mm	C mm Tri	M Kg Tri	P Kg
140 SX 34/15	2879	1808	1071	92	58
140 SX 34/16	2980	1909	1071	92	61
140 SX 34/17	3191	2010	1181	100	64
140 SX 34/18	3292	2111	1181	100	68
140 SX 34/19	3393	2212	1181	100	71
140 SX 34/20	3564	2313	1251	108	75
140 SX 34/21	3665	2414	1251	108	78
140 SX 34/22	3766	2515	1251	108	82
140 SX 34/23	3957	2616	1341	118	85
140 SX 34/24	4058	2717	1341	118	89
140 SX 34/25	4159	2818	1341	118	92
140 SX 34/26	4260	2919	1341	118	96
140 SX 34/27	4361	3020	1341	118	99

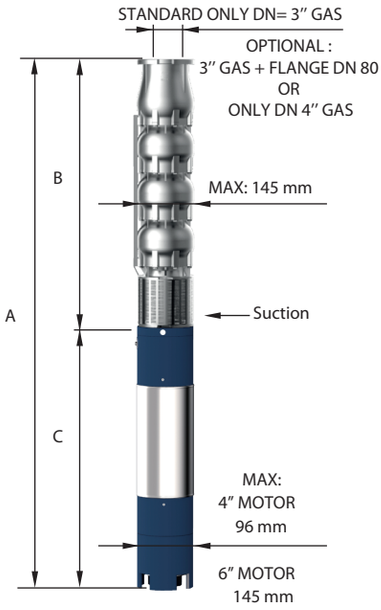

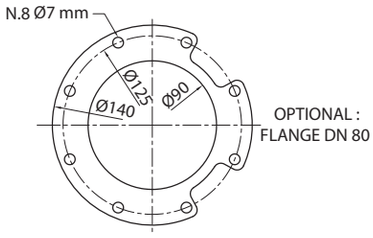

FOR COMMERCIAL TUBE
EXTERNAL DIAMETER: 88,9 mm

n% = Rendimento della pompa
n% = Rendement de la pompe
n% = Pump efficiency
n% = Rendimiento de la bomba

Max 76%

kW/st = Assorbimento per stadio
kW/st = Absorption par étage
kW/st = Stage absorption
kW/st = Potencia absorbida por etapa

Max 1,33

Tolleranza alla sabbia 50 g/m³ - Sand tolerance 50 g/m³ - Compatibilità con acqua potabile DM 174 Drinking water compatibility according to DM 174
Tolleranze secondo UNI ISO 9906 livello 3B - Tolerances according to UNI ISO 9906 grade 3B

PANELLI®

6"

140 SX34

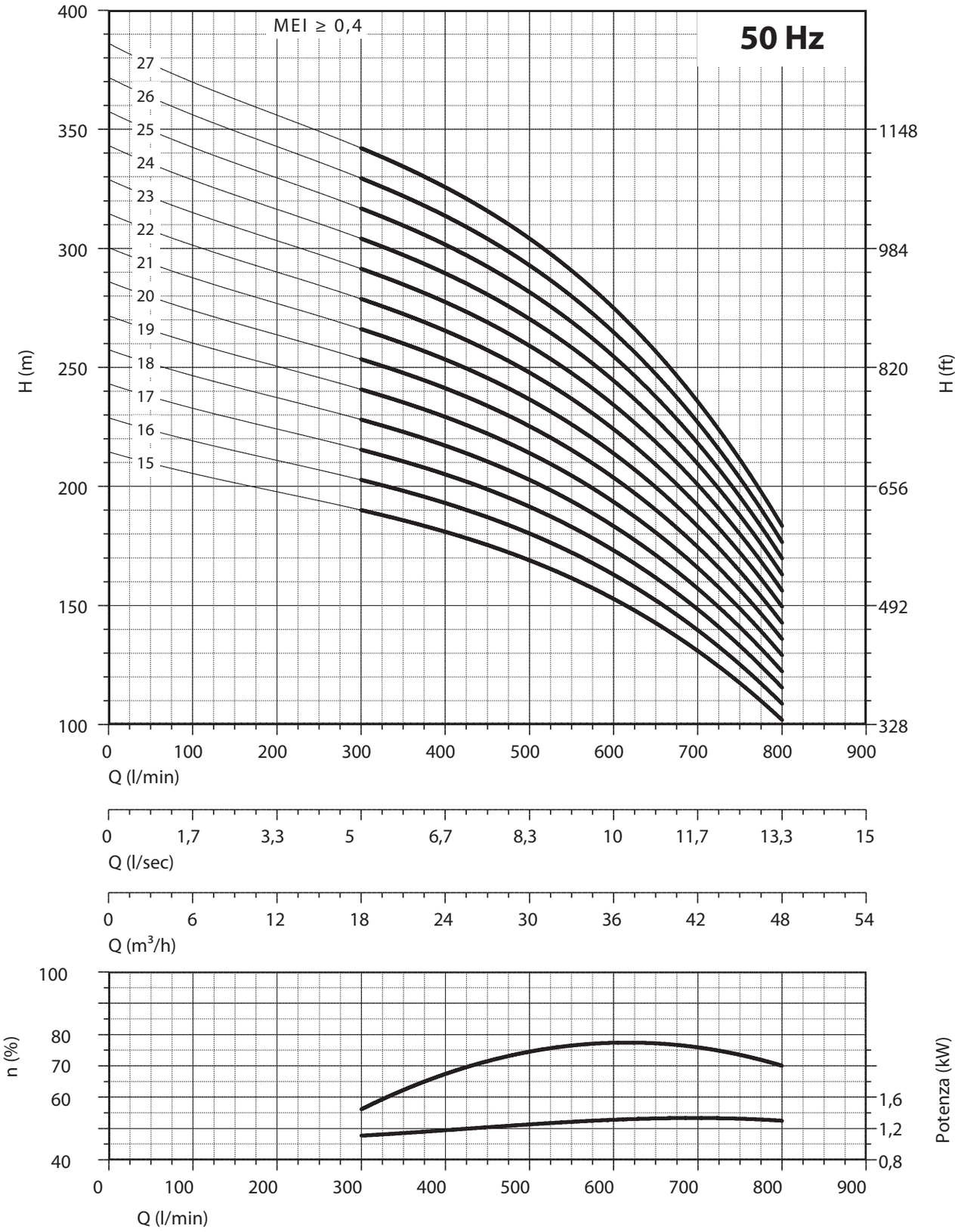

NPSH (m)	25%	50%	75%	100%
140 SX 34	3,4	3,4	3,8	8

6" 140 SX44

PANELLI®

CARATTERISTICHE IDRAULICHE - HYDRAULIC PERFORMANCES

Q= Portata - Capacity - Debit **50 Hz n= 2900 min**

Tipo Type	Power kW	Power HP	l/min	0	400	500	600	700	800	900	1000
			l/sec	0	6,67	8,33	10	11,67	13,33	15	16,67
			m^3/h	0	24	30	36	42	48	54	60
140 SX 44/04	5,50	7,5	H(m)	56	46	44	42	39	35	30	26
140 SX 44/05	7,50	10		70	57	56	53	49	44	37	32
140 SX 44/06	9,20	12,5		84	68	67	64	59	53	44	38
140 SX 44/07	11	15		98	80	78	74	69	62	52	45
140 SX 44/08	13	17,5		112	91	89	85	78	70	59	51
140 SX 44/09	13	17,5		126	103	100	95	88	79	67	58
140 SX 44/10	15	20		140	114	111	106	98	88	74	64
140 SX 44/11	18,50	25		154	125	122	117	108	97	81	70
140 SX 44/12	18,50	25		168	137	133	127	118	106	89	77
140 SX 44/13	22	30		182	148	144	138	127	114	96	83
140 SX 44/14	22	30		196	160	155	283	137	123	104	90

DIMENSIONI D'INGOMBRO E PESI - OVERALL DIMENSIONS AND WEIGHTS

Type	**A** mm Tri V 400	**B** mm	**C** mm Tri	**M** Kg Tri	**P** Kg
140 SX 44/04	1395	697	698	27	20
140 SX 44/05	1616	798	818	32	23
140 SX 44/06	1650	899	751	60	27
140 SX 44/07	1811	1000	811	65	30
140 SX 44/08	1942	1101	841	70	33
140 SX 44/09	2043	1202	841	70	37
140 SX 44/10	2234	1303	931	75	40
140 SX 44/11	2395	1404	991	83	44
140 SX 44/12	2496	1505	991	83	47
140 SX 44/13	2677	1606	1071	92	51
140 SX 44/14	2778	1707	1071	92	54

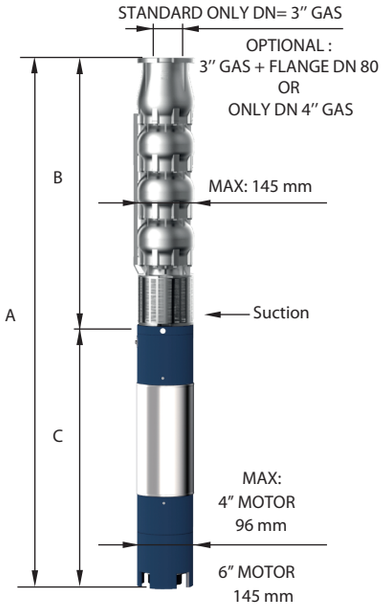

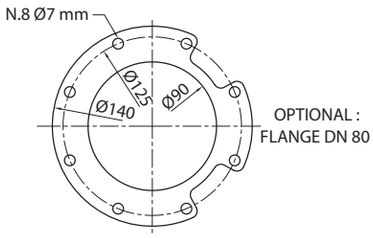

FOR COMMERCIAL TUBE
EXTERNAL DIAMETER: 88,9 mm

n% = Rendimento della pompa
n% = Rendement de la pompe
n% = Pump efficiency
n% = Rendimiento de la bomba

Max 78,5%

kW/st = Assorbimento per stadio
kW/st = Absorption par étage
kW/st = Stage absorption
kW/st = Potencia absorbida por etapa

Max 1,44

Tolleranza alla sabbia 50 g/m³ - Sand tolerance 50 g/m³ - Compatibilità con acqua potabile DM 174 Drinking water compatibility according to DM 174
Tolleranze secondo UNI ISO 9906 livello 3B - Tolerances according to UNI ISO 9906 grade 3B

PANELLI®

6"

140 SX44

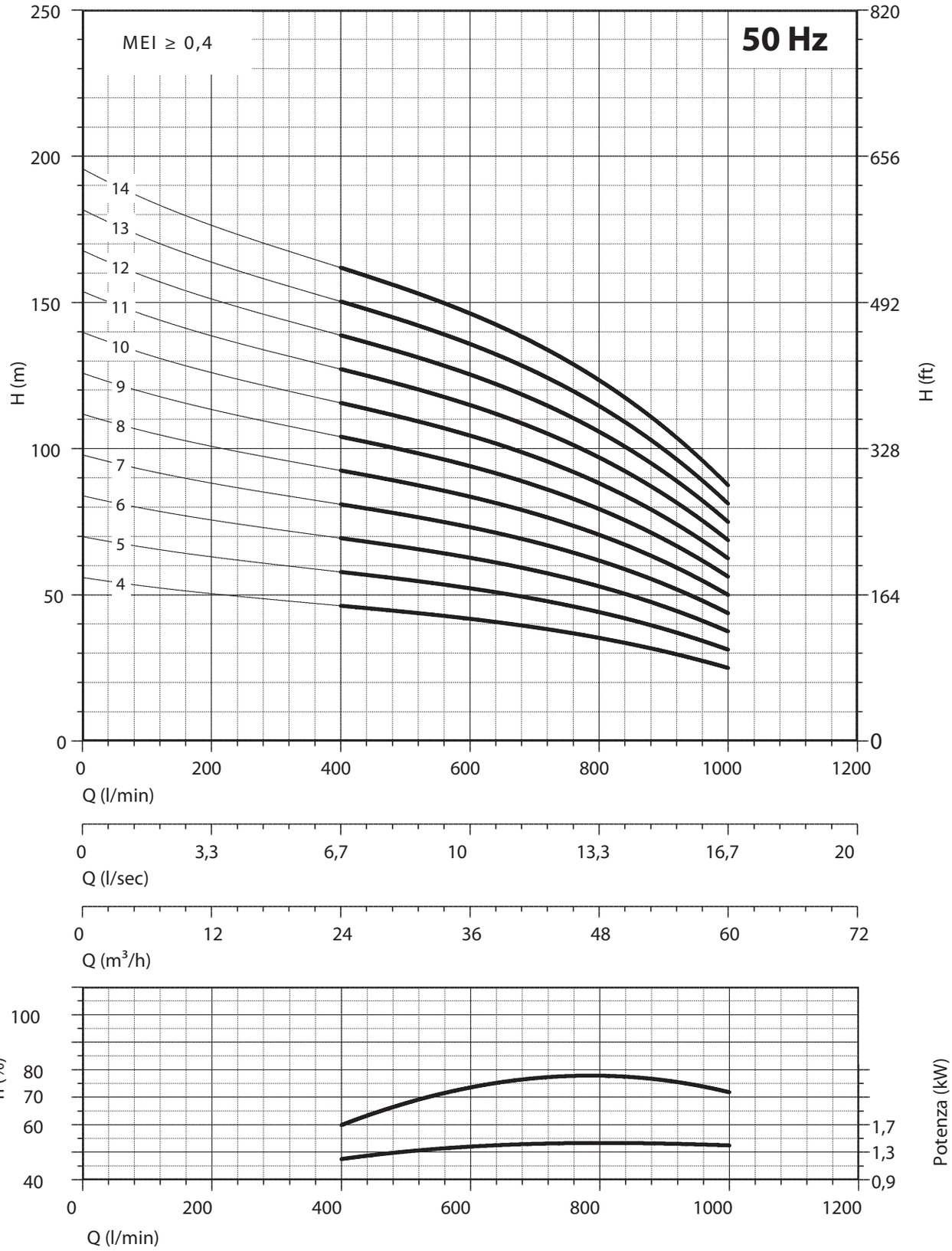

NPSH (m)	25%	50%	75%	100%
140 SX 44	3,45	3,5	3,8	5

acciaio inox microfuso - elevato rendimento - casted stainless steel - high efficiency

6" 140 SX44

PANELLI®

CARATTERISTICHE IDRAULICHE - HYDRAULIC PERFORMANCES

Q= Portata - Capacity - Debit **50 Hz n= 2900 min**

Tipo Type	Power kW	Power HP	l/min	0	400	500	600	700	800	900	1000
			l/sec	0	6,67	8,33	10	11,67	13,33	15	16,67
			m^3/h	0	24	30	36	42	48	54	60
140 SX 44/15	22	30	H(m)	210	171	167	159	147	132	111	96
140 SX 44/16	26	35		224	182	178	170	157	141	118	102
140 SX 44/17	26	35		238	194	189	180	167	150	126	109
140 SX 44/18	26	35		252	205	200	191	176	158	133	115
140 SX 44/19	30	40		266	217	211	201	186	167	141	122
140 SX 44/20	30	40		280	228	222	212	196	176	148	128
140 SX 44/21	37	50		294	239	233	223	206	185	155	134
140 SX 44/22	37	50		308	251	244	233	216	194	163	141
140 SX 44/23	37	50		322	262	255	244	225	202	170	147
140 SX 44/24	37	50		336	274	266	254	235	211	178	154
140 SX 44/25	37	50		350	285	278	265	245	220	185	160

DIMENSIONI D'INGOMBRO E PESI - OVERALL DIMENSIONS AND WEIGHTS

Type	A mm Tri V 400	B mm	C mm Tri	M Kg Tri	P Kg
140 SX 44/15	2879	1808	1071	92	58
140 SX 44/16	3090	1909	1181	100	61
140 SX 44/17	3191	2010	1181	100	64
140 SX 44/18	3362	2111	1251	108	68
140 SX 44/19	3463	2212	1251	108	71
140 SX 44/20	3654	2313	1341	118	75
140 SX 44/21	3755	2414	1341	118	78
140 SX 44/22	3856	2515	1341	118	82
140 SX 44/23	3957	2616	1341	118	85
140 SX 44/24	4058	2717	1341	118	89
140 SX 44/25	4159	2818	1341	118	92

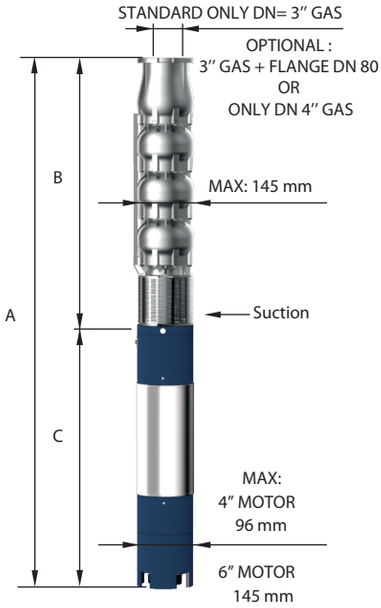

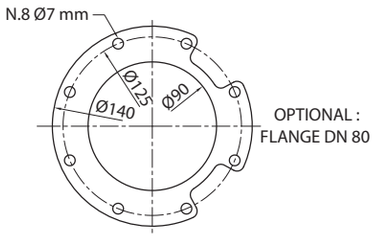

FOR COMMERCIAL TUBE
EXTERNAL DIAMETER: 88,9 mm

n% = Rendimento della pompa
n% = Rendement de la pompe
n% = Pump efficiency
n% = Rendimiento de la bomba

Max 78,5%

kW/st = Assorbimento per stadio
kW/st = Absorption par étage
kW/st = Stage absorption
kW/st = Potencia absorbida por etapa

Max 1,44

Tolleranza alla sabbia 50 g/m³ - Sand tolerance 50 g/m³ - Compatibilità con acqua potabile DM 174 Drinking water compatibility according to DM 174
Tolleranze secondo UNI ISO 9906 livello 3B - Tolerances according to UNI ISO 9906 grade 3B

PANELLI®

6"

140 SX44

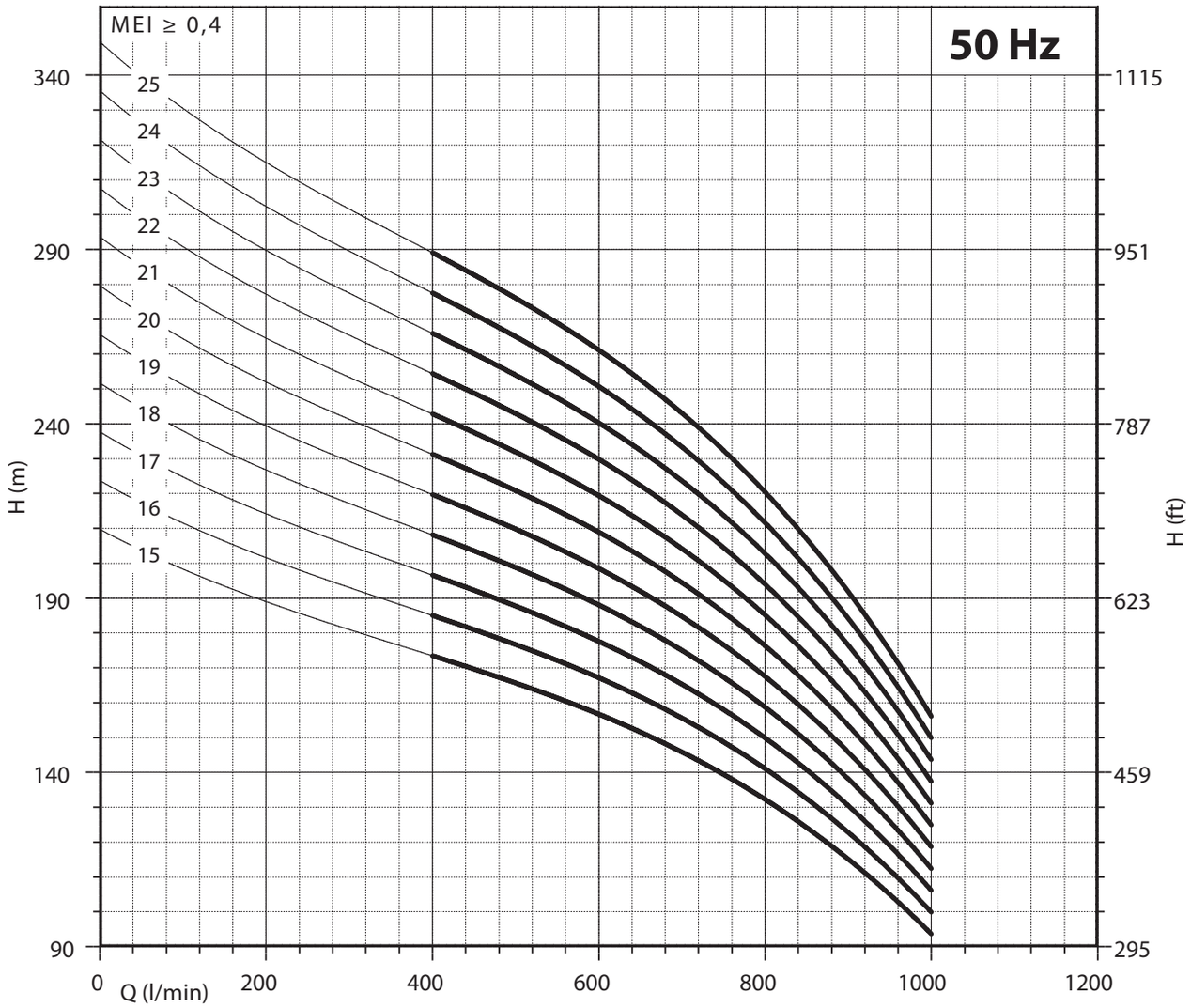

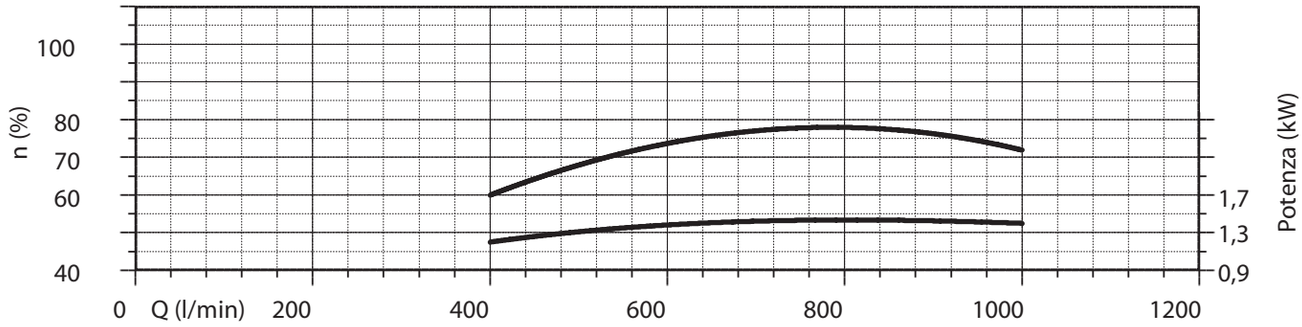

NPSH (m)	25%	50%	75%	100%
140 SX 44	3,45	3,5	3,8	5

6″ 140 SX54

PANELLI®

CARATTERISTICHE IDRAULICHE - HYDRAULIC PERFORMANCES

Q= Portata - Capacity - Debit **50 Hz n= 2900 min**

Tipo Type	Power kW	Power HP	l/min	0	600	700	800	900	1000	1100	1200
			l/sec	0	10	11,67	13,33	15	16,67	18,33	20
			m³/h	0	36	42	48	54	60	66	72
140 SX 54/03	5,50	7,5	H(m)	41	31	29	27	26	23	21	18
140 SX 54/04	7,50	10		55	41	38	36	34	31	28	24
140 SX 54/05	9,20	12,5		69	52	48	46	43	39	35	30
140 SX 54/06	11	15		82	62	58	55	51	47	41	36
140 SX 54/07	13	17,5		96	72	67	64	60	55	48	42
140 SX 54/08	13	17,5		110	82	77	73	68	62	55	48
140 SX 54/09	15	20		123	93	86	82	77	70	62	54
140 SX 54/10	18,50	25		137	103	96	91	85	78	69	60
140 SX 54/11	18,50	25		151	113	106	100	94	86	76	66
140 SX 54/12	22	30		164	124	115	109	102	94	83	72

DIMENSIONI D'INGOMBRO E PESI - OVERALL DIMENSIONS AND WEIGHTS

Type	A mm Tri V 400	B mm	C mm Tri	M Kg Tri	P Kg
140 SX 54/03	1312	614	698	27	19
140 SX 54/04	1539	721	818	32	22
140 SX 54/05	1579	828	751	60	26
140 SX 54/06	1746	935	811	65	29
140 SX 54/07	1883	1042	841	70	32
140 SX 54/08	1990	1149	841	70	35
140 SX 54/09	2187	1256	931	75	38
140 SX 54/10	2354	1363	991	83	41
140 SX 54/11	2461	1470	991	83	45
140 SX 54/12	2648	1577	1071	92	49

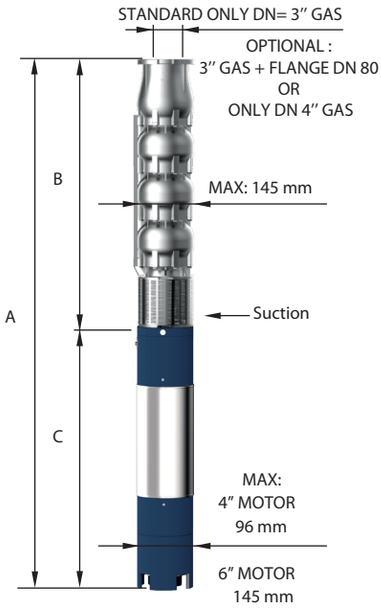

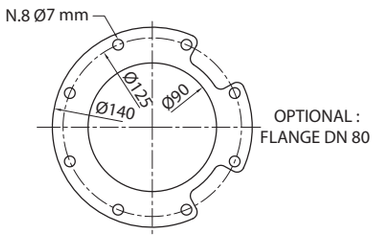

FOR COMMERCIAL TUBE
EXTERNAL DIAMETER: 88,9 mm

n% = Rendimento della pompa
n% = Rendement de la pompe
n% = Pump efficiency
n% = Rendimiento de la bomba
Max 77%

kW/st = Assorbimento per stadio
kW/st = Absorption par étage
kW/st = Stage absorption
kW/st = Potencia absorbida por etapa
Max 1,65

Tolleranza alla sabbia 50 g/m³ - Sand tolerance 50 g/m³ - Compatibilità con acqua potabile DM 174 Drinking water compatibility according to DM 174
Tolleranze secondo UNI ISO 9906 livello 3B - Tolerances according to UNI ISO 9906 grade 3B

PANELLI®

6"

140 SX54

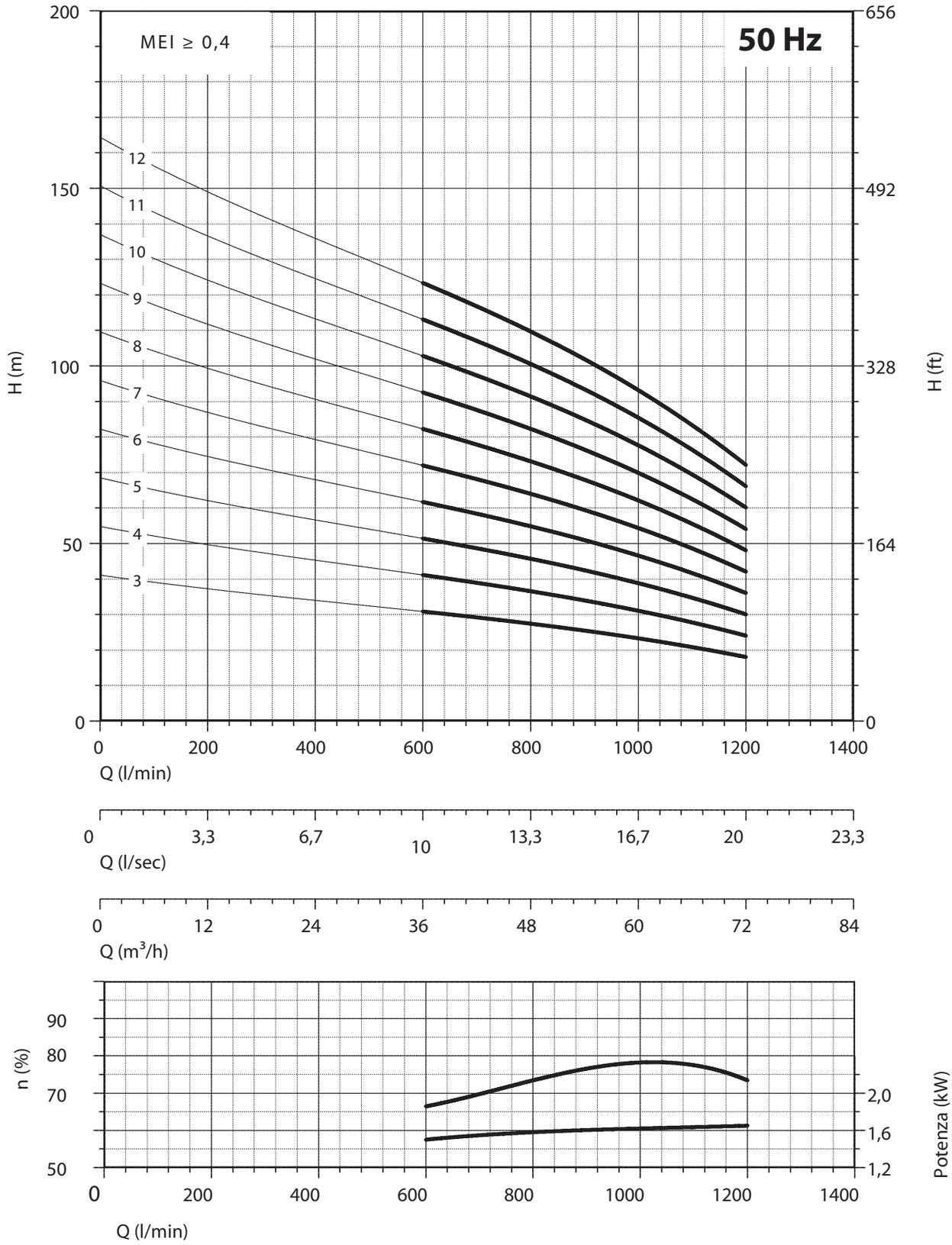

NPSH (m)	25%	50%	75%	100%
140 SX 54	3,8	3,8	5,1	7,1

acciaio inox microfuso - elevato rendimento - casted stainless steel - high efficiency

6" 140 SX54

PANELLI®

CARATTERISTICHE IDRAULICHE - HYDRAULIC PERFORMANCES

Q= Portata - Capacity - Debit **50 Hz n= 2900 min**

Tipo Type	Power kW	Power HP	l/min	0	600	700	800	900	1000	1100	1200
			l/sec	0	10	11,67	13,33	15	16,67	18,33	20
			m^3/h	0	36	42	48	54	60	66	72
140 SX 54/13	22	30	H(m)	178	134	125	118	111	101	90	78
140 SX 54/14	26	35		192	144	134	127	119	109	97	84
140 SX 54/15	26	35		206	155	144	137	128	117	104	90
140 SX 54/16	26	35		219	165	154	146	136	125	110	96
140 SX 54/17	30	40		233	175	163	155	145	133	117	102
140 SX 54/18	30	40		247	185	173	164	153	140	124	108
140 SX 54/19	37	50		260	196	182	173	162	148	131	114
140 SX 54/20	37	50		274	206	192	182	170	156	138	120
140 SX 54/21	37	50		288	216	202	191	179	164	145	126
140 SX 54/22	37	50		301	227	211	200	187	172	152	132

DIMENSIONI D'INGOMBRO E PESI - OVERALL DIMENSIONS AND WEIGHTS

Type	A mm Tri V 400	B mm	C mm Tri	M Kg Tri	P Kg
140 SX 54/13	2755	1684	1071	92	53
140 SX 54/14	2972	1791	1181	100	56
140 SX 54/15	3079	1898	1181	100	59
140 SX 54/16	3186	2005	1181	100	61
140 SX 54/17	3363	2112	1251	108	64
140 SX 54/18	3470	2219	1251	108	67
140 SX 54/19	3667	2326	1341	118	70
140 SX 54/20	3774	2433	1341	118	74
140 SX 54/21	3881	2540	1341	118	77
140 SX 54/22	3988	2647	1341	118	82

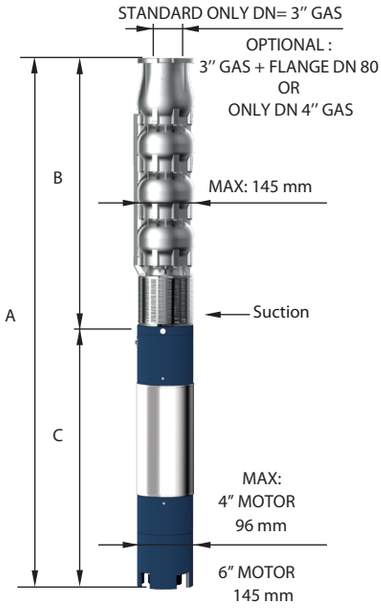

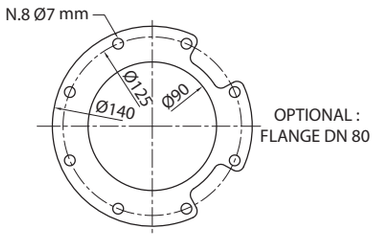

FOR COMMERCIAL TUBE
EXTERNAL DIAMETER: 88,9 mm

n% = Rendimento della pompa
n% = Rendement de la pompe
n% = Pump efficiency
n% = Rendimiento de la bomba

Max 77%

kW/st = Assorbimento per stadio
kW/st = Absorption par étage
kW/st = Stage absorption
kW/st = Potencia absorbida por etapa

Max 1,65

Tolleranza alla sabbia 50 g/m³ - Sand tolerance 50 g/m³ - Compatibilità con acqua potabile DM 174 Drinking water compatibility according to DM 174
Tolleranze secondo UNI ISO 9906 livello 3B - Tolerances according to UNI ISO 9906 grade 3B

PANELLI®

6"

140 SX54

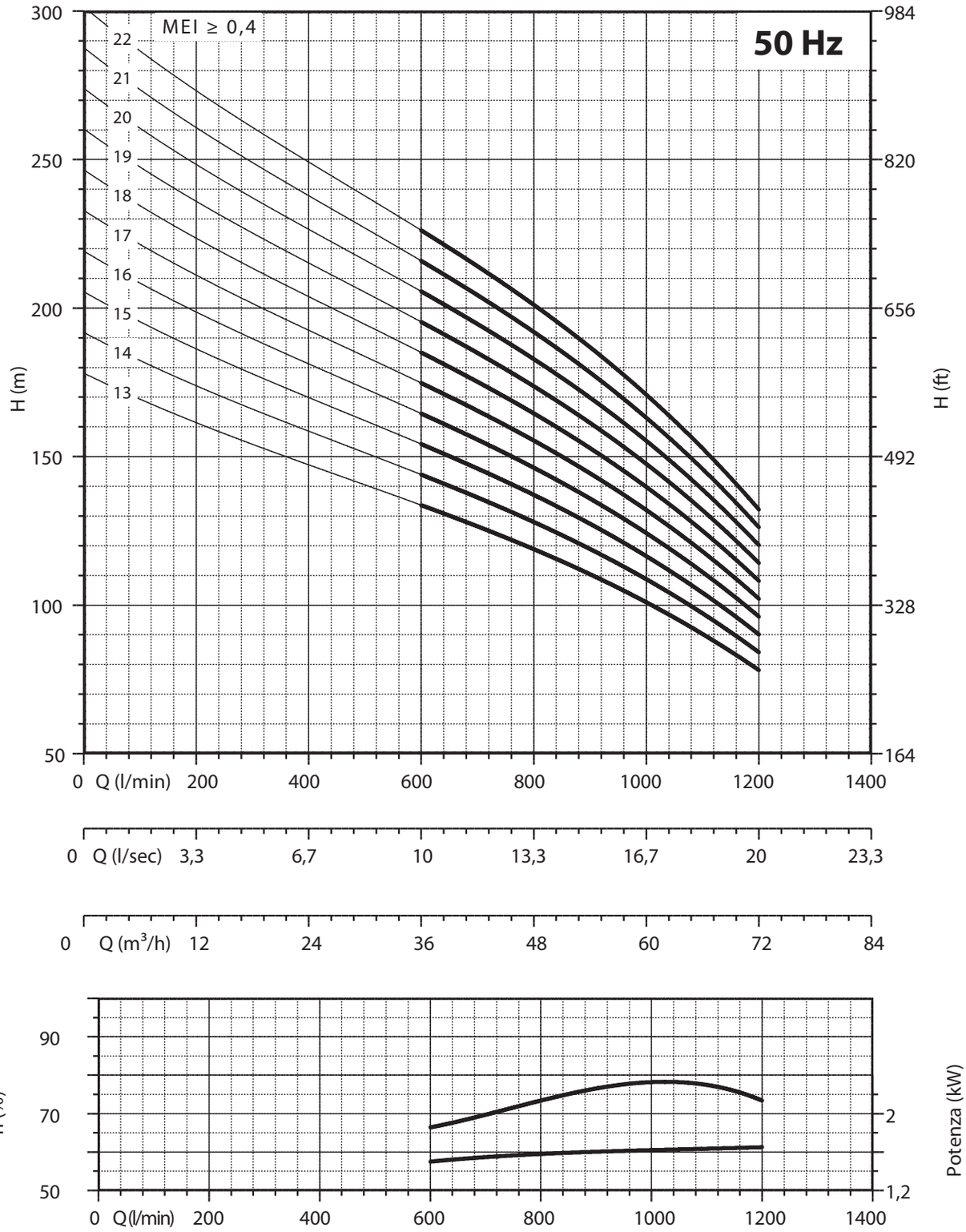

NPSH (m)	25%	50%	75%	100%
140 SX 54	3,8	3,8	7,1	5,1

acciaio inox microfuso - elevato rendimento - casted stainless steel - high efficiency

6" 140 SX64

PANELLI®

CARATTERISTICHE IDRAULICHE - HYDRAULIC PERFORMANCES

Q= Portata - Capacity - Debit **50 Hz n= 2900 min**

Tipo Type	Power kW	Power HP	l/min	0	700	800	900	1000	1100	1200	1300	1400	1500
			l/sec	0	11,67	13,33	15	16,67	18,33	20	21,67	23,33	25
			m³/h	0	42	48	54	60	66	72	78	84	90
140 SX 64/01	2,20	3	H(m)	13	10	9,9	9,6	9,3	9	8,6	8	7	6
140 SX 64/02	4	5,5		26	21	20	19,5	19	18	17	15	13	11
140 SX 64/03	7,50	10		39	31	30	29	28	27	26	23	20	17
140 SX 64/04	9,20	12,5		52	41	40	38	37	36	34	31	27	23
140 SX 64/05	11	15		66	52	50	48	47	45	43	38	33	28
140 SX 64/06	13	17,5		79	62	59	57	56	55	51	46	40	34
140 SX 64/07	15	20		92	73	69	67	66	64	60	53	46	39
140 SX 64/08	18,50	25		105	83	79	76	75	73	68	61	53	45
140 SX 64/09	22	30		118	93	89	86	84	82	77	69	60	51
140 SX 64/10	22	30		131	104	99	95	94	91	85	76	66	56
140 SX 64/11	26	35		144	114	109	105	103	100	94	84	73	62
140 SX 64/12	26	35		157	124	119	114	112	109	102	92	80	68
140 SX 64/13	30	40		170	135	129	124	122	118	111	99	86	73
140 SX 64/14	30	40		183	145	139	134	131	127	120	107	93	79
140 SX 64/15	37	50		197	155	149	143	140	136	128	114	99	84
140 SX 64/16	37	50		210	166	158	153	150	145	137	122	106	90
140 SX 64/17	37	50		223	176	168	162	159	155	145	130	113	96
140 SX 64/18	37	50		236	186	178	172	168	164	154	137	119	101

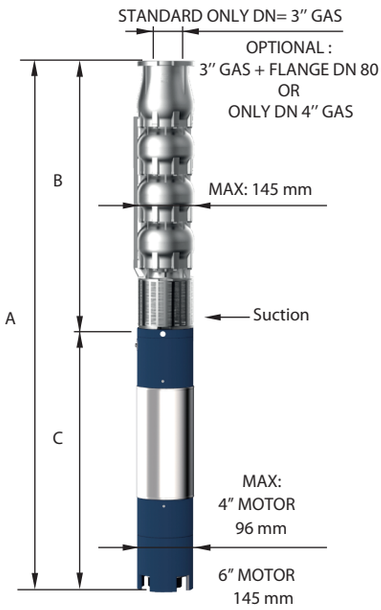

DIMENSIONI D'INGOMBRO E PESI - OVERALL DIMENSIONS AND WEIGHTS

Type	A mm Tri V 400	B mm	C mm Tri	M Kg Tri	P Kg
140 SX 64/01	853	400	452	15	12
140 SX 64/02	1104	507	597	22	15
140 SX 64/03	1432	614	818	32	19
140 SX 64/04	1472	721	751	60	23
140 SX 64/05	1639	828	811	65	27
140 SX 64/06	1776	935	841	70	32
140 SX 64/07	1973	1042	931	75	36
140 SX 64/08	2140	1149	991	83	40
140 SX 64/09	2327	1256	1071	92	44
140 SX 64/10	2434	1363	1071	92	48
140 SX 64/11	2651	1470	1181	100	53
140 SX 64/12	2758	1577	1181	100	57
140 SX 64/13	2935	1684	1251	108	61
140 SX 64/14	3042	1791	1251	108	65
140 SX 64/15	3239	1898	1341	118	70
140 SX 64/16	3346	2005	1341	118	75
140 SX 64/17	3453	2112	1341	118	80
140 SX 64/18	3560	2219	1341	118	85

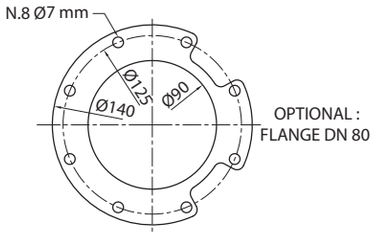

FOR COMMERCIAL TUBE
EXTERNAL DIAMETER: 88,9 mm

n% = Rendimento della pompa
n% = Rendement de la pompe
n% = Pump efficiency
n% = Rendimiento de la bomba

Max 76%

kW/st = Assorbimento per stadio
kW/st = Absorption par étage
kW/st = Stage absorption
kW/st = Potencia absorbida por etapa

Max 2,18

Tolleranza alla sabbia 50 g/m³ - Sand tolerance 50 g/m³ - Compatibilità con acqua potabile DM 174 Drinking water compatibility according to DM 174
Tolleranze secondo UNI ISO 9906 livello 3B - Tolerances according to UNI ISO 9906 grade 3B

PANELLI®

6"

140 SX64

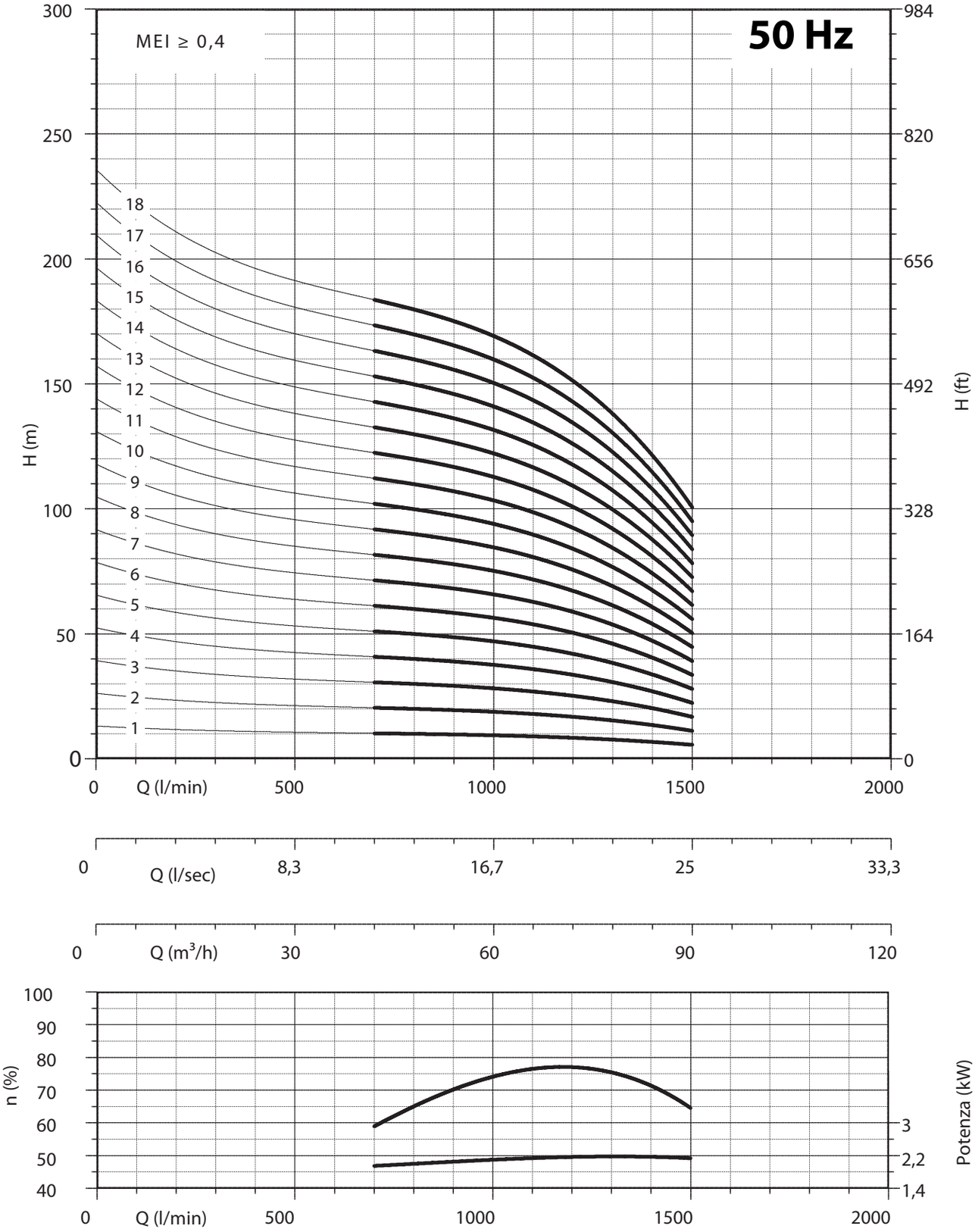

NPSH (m)	25%	50%	75%	100%
140 SX 64	3,8	3,8	5,1	7,1

acciaio inox microfuso - elevato rendimento - casted stainless steel - high efficiency

8″ 180 SX78

PANELLI®

CARATTERISTICHE IDRAULICHE - HYDRAULIC PERFORMANCES

Q= Portata - Capacity - Debit **50 Hz n= 2900 min**

Tipo Type	Power kW	Power HP	l/min	0	600	800	1000	1200	1400	1600
			l/sec	0	10	13,33	16,67	20	23,33	26,67
			m³/h	0	36	48	60	72	84	96
180 SX 78 /01	7,50	10	H(m)	27	24	23	22	20	18	15
180 SX 78 /02	11	15		54	49	47	44	40	35	30
180 SX 78 /03	18,50	25		81	73	70	65	60	53	44
180 SX 78 /04	26	35		108	97	93	87	80	70	59
180 SX 78 /05	30	40		135	121	116	109	100	88	74
180 SX 78 /06	37	50		162	146	140	131	120	105	89
180 SX 78 /07	44	60		189	170	163	152	140	123	103
180 SX 78 /08	55	75		216	194	186	174	160	140	118
180 SX 78 /09	55	75		243	218	209	196	180	158	133
180 SX 78 /10	66	90		270	243	233	218	200	175	148
180 SX 78 /11	66	90		297	267	256	239	220	193	162
180 SX 78 /12	75	100		324	291	279	261	240	210	177
180 SX 78 /13	75	100		351	315	302	283	260	228	192
180 SX 78 /14	92	125		378	340	326	305	280	245	207
180 SX 78 /15	92	125		405	364	349	326	300	263	221
180 SX 78 /16	92	125		432	388	372	348	320	280	236
180 SX 78 /17	110	150		459	412	395	370	340	298	251
180 SX 78 /18	110	150		486	437	419	392	360	315	266
180 SX 78 /19	110	150		513	461	442	413	380	333	280

DIMENSIONI D'INGOMBRO E PESI - OVERALL DIMENSIONS AND WEIGHTS

Type	A mm Tri V 400	B mm	C mm Tri	M Kg Tri	P Kg
180 SX 78 /01	1226	525	701	55	19
180 SX 78 /02	1461	650	811	65	26
180 SX 78 /03	1766	775	991	83	32
180 SX 78 /04	2081	900	1181	100	39
180 SX 78 /05	2276	1025	1251	108	45
180 SX 78 /06	2491	1150	1341	118	52
180 SX 78 /07	2398	1275	1123	178	58
180 SX 78 /08	2633	1400	1233	200	65
180 SX 78 /09	2758	1525	1233	200	71
180 SX 78 /10	2953	1650	1303	214	78
180 SX 78 /11	3078	1775	1303	214	84
180 SX 78 /12	3283	1900	1383	230	91
180 SX 78 /13	3408	2025	1383	230	97
180 SX 78 /14	3733	2150	1583	270	104
180 SX 78 /15	3858	2275	1583	270	110
180 SX 78 /16	3983	2400	1583	270	117
180 SX 78 /17	4258	2525	1733	300	123
180 SX 78 /18	4383	2650	1733	300	130
180 SX 78 /19	4508	2775	1733	300	136

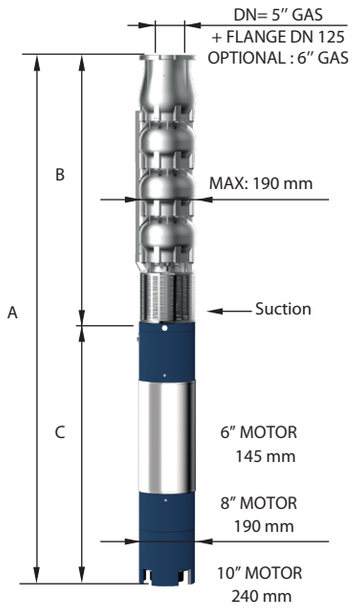

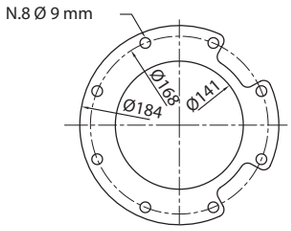

FOR COMMERCIAL TUBE
EXTERNAL DIAMETER: 139,7 mm

n% = Rendimento della pompa
n% = Rendement de la pompe
n% = Pump efficiency
n% = Rendimiento de la bomba

Max 74%

kW/st = Assorbimento per stadio
kW/st = Absorption par étage
kW/st = Stage absorption
kW/st = Potencia absorbida por etapa

Max 5,75

Tolleranza alla sabbia 50 g/m³ - Sand tolerance 50 g/m³ - Compatibilità con acqua potabile DM 174 Drinking water compatibility according to DM 174
Tolleranze secondo UNI ISO 9906 livello 3B - Tolerances according to UNI ISO 9906 grade 3B

PANELLI®

8"

180 SX78

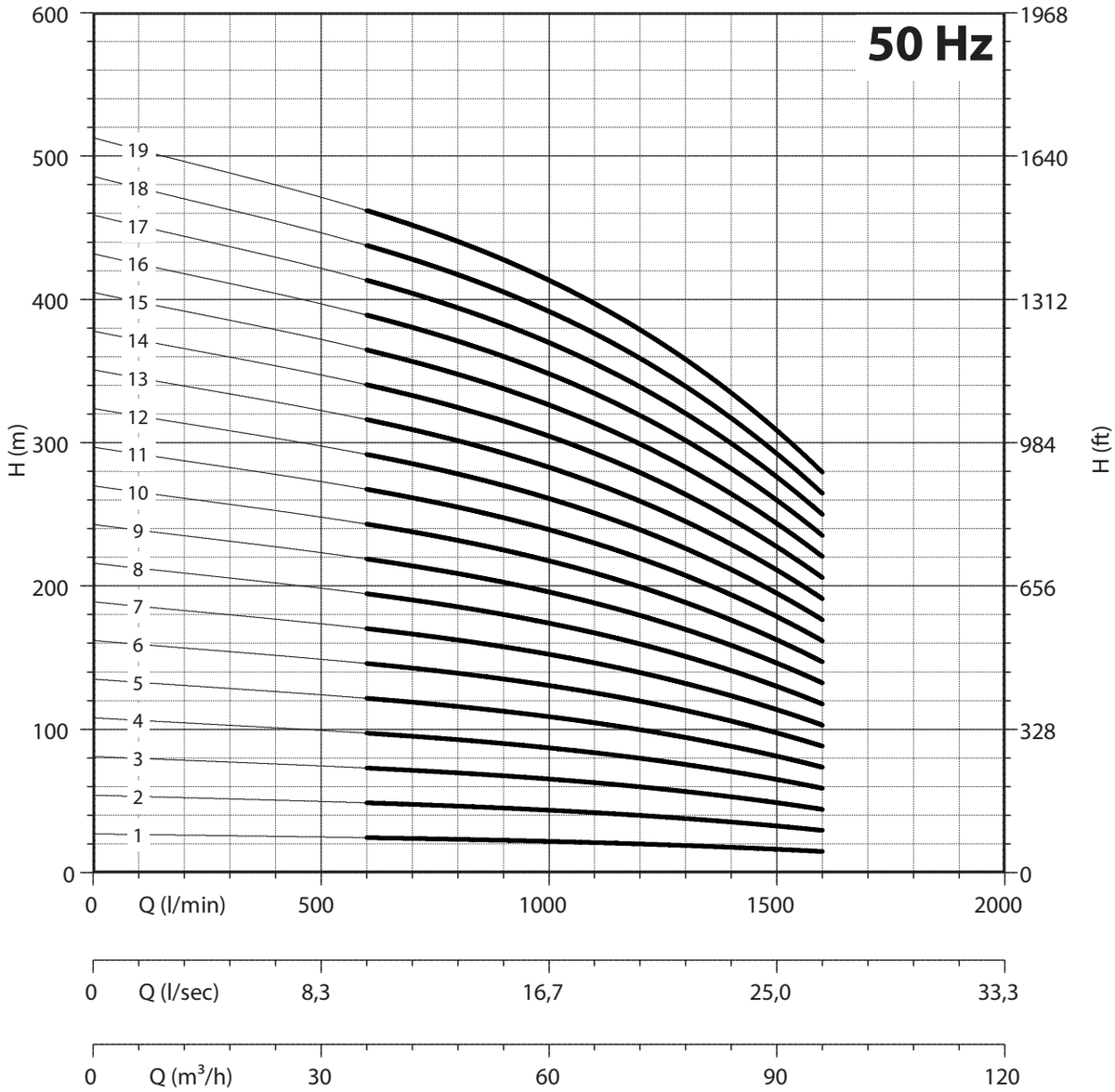

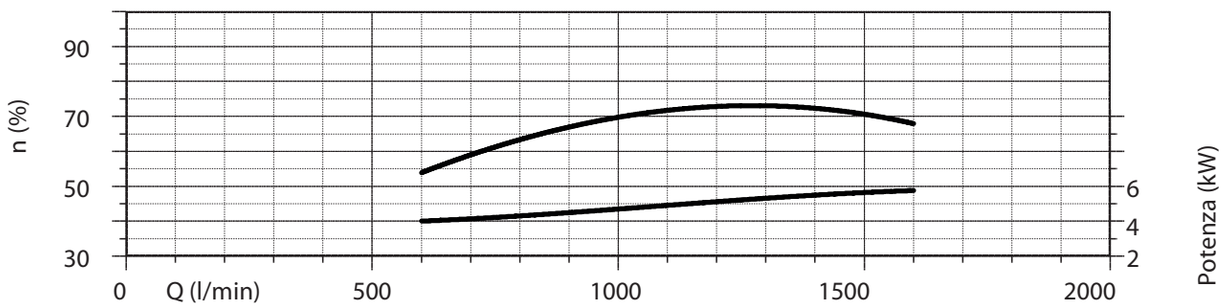

NPSH (m)	25%	50%	75%	100%
180 SX 78	3	3	3,5	4,5

acciaio inox microfuso - elevato rendimento - casted stainless steel - high efficiency

8" 180 SX90

PANELLI®

CARATTERISTICHE IDRAULICHE - HYDRAULIC PERFORMANCES

Q= Portata - Capacity - Debit **50 Hz n= 2900 min**

Tipo Type	Power kW	Power HP	l/min	0	800	1000	1200	1400	1600	1800	2000
			l/sec	0	13,33	16,67	20	23,33	26,67	30	33,33
			m³/h	0	48	60	72	84	96	108	120
180 SX 90/01	7,50	10	H(m)	27	24	23	22	20	18	16	13
180 SX 90/02	13	17,5		54	49	47	44	40	36	31	25
180 SX 90/03	22	30		81	73	70	65	60	54	47	38
180 SX 90/04	26	35		108	97	93	87	80	71	62	50
180 SX 90/05	37	50		135	121	116	109	101	89	78	63
180 SX 90/06	44	60		162	146	140	131	121	107	93	76
180 SX 90/07	44	60		189	170	163	152	141	125	109	88
180 SX 90/08	55	75		216	194	186	174	161	143	124	101
180 SX 90/09	66	90		243	218	209	196	181	161	140	114
180 SX 90/10	66	90		270	243	233	218	201	179	155	126
180 SX 90/11	75	100		297	267	256	239	221	197	171	139
180 SX 90/12	92	125		324	291	279	261	241	214	186	151
180 SX 90/13	92	125		351	315	302	283	262	232	202	164
180 SX 90/14	92	125		378	340	326	305	282	250	217	177
180 SX 90/15	110	150		405	364	349	326	302	268	233	189
180 SX 90/16	110	150		432	388	372	348	322	286	248	202
180 SX 90/17	110	150		459	412	395	370	342	304	264	215

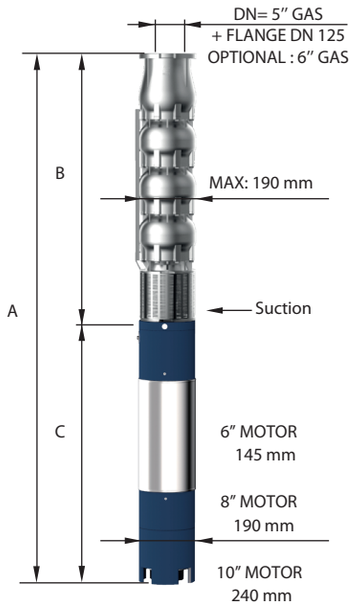

DIMENSIONI D'INGOMBRO E PESI - OVERALL DIMENSIONS AND WEIGHTS

Type	A mm Tri V 400	B mm	C mm Tri	M Kg Tri	P Kg
180 SX 90/01	1226	525	701	55	19
180 SX 90/02	1491	650	841	70	26
180 SX 90/03	1846	775	1071	92	32
180 SX 90/04	2081	900	1181	100	39
180 SX 90/05	2366	1025	1341	118	45
180 SX 90/06	2273	1150	1123	178	52
180 SX 90/07	2398	1275	1123	178	58
180 SX 90/08	2633	1400	1233	200	65
180 SX 90/09	2828	1525	1303	214	71
180 SX 90/10	2953	1650	1303	214	78
180 SX 90/11	3158	1775	1383	230	84
180 SX 90/12	3483	1900	1583	270	91
180 SX 90/13	3608	2025	1583	270	97
180 SX 90/14	3733	2150	1583	270	104
180 SX 90/15	4008	2275	1733	300	110
180 SX 90/16	4133	2400	1733	300	117
180 SX 90/17	4258	2525	1733	300	123

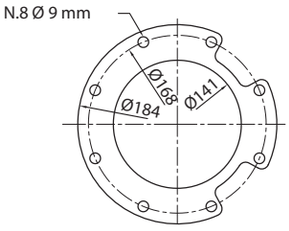

FOR COMMERCIAL TUBE
EXTERNAL DIAMETER: 139,7 mm

n% = Rendimento della pompa
n% = Rendement de la pompe
n% = Pump efficiency
n% = Rendimiento de la bomba

Max 75%

kW/st = Assorbimento per stadio
kW/st = Absorption par étage
kW/st = Stage absorption
kW/st = Potencia absorbida por etapa

Max 6,47

Tolleranza alla sabbia 50 g/m³ - Sand tolerance 50 g/m³ - Compatibilità con acqua potabile DM 174 Drinking water compatibility according to DM 174
Tolleranze secondo UNI ISO 9906 livello 3B - Tolerances according to UNI ISO 9906 grade 3B

PANELLI®

8"

180 SX90

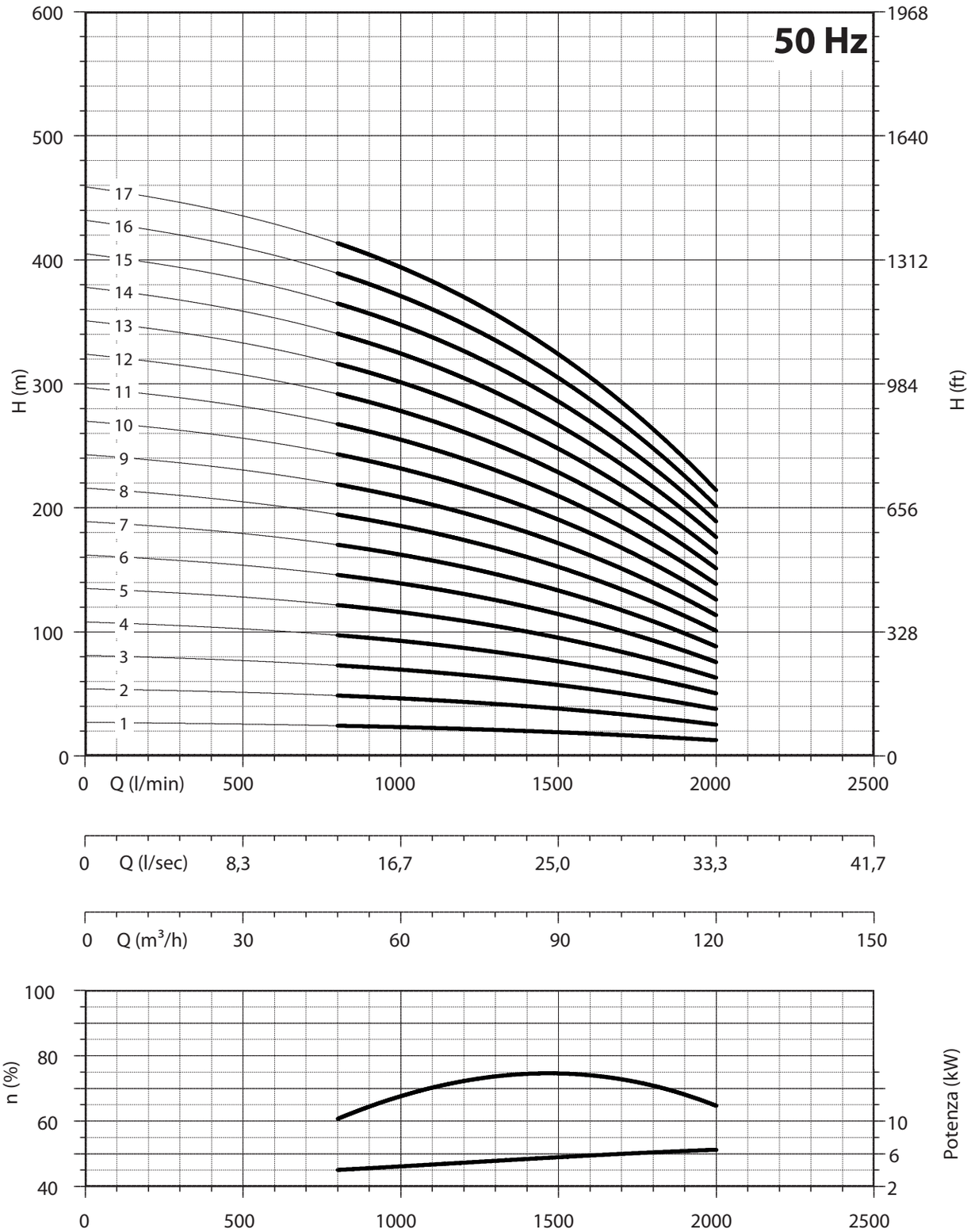

NPSH (m)	25%	50%	75%	100%
180 SX 90	2,5	2,9	3,9	7,8

acciaio inox microfuso - elevato rendimento - casted stainless steel - high efficiency

8″ 180 SX102

PANELLI®

CARATTERISTICHE IDRAULICHE - HYDRAULIC PERFORMANCES

Q= Portata - Capacity - Debit **50 Hz n= 2900 min**

Tipo Type	Power kW	Power HP	l/min	0	1000	1200	1400	1600	1800	2000	2200	2400
			l/sec	0	16,67	20	23,33	26,67	30	33,33	36,67	40
			m³/h	0	60	72	84	96	108	120	132	144
180 SX 102 /1	7,50	10	H(m)	28	23	22	21	20	19	17	15	13
180 SX 102 /2	15	20		55	45	44	42	41	38	35	31	26
180 SX 102 /3	22	30		83	68	65	63	61	57	52	46	38
180 SX 102 /4	30	40		110	90	87	84	82	76	69	62	51
180 SX 102 /5	37	50		138	113	109	106	102	96	87	77	64
180 SX 102 /6	44	60		165	135	131	127	122	115	104	92	77
180 SX 102 /7	55	75		193	158	153	148	143	134	121	108	90
180 SX 102 /8	66	90		220	180	174	169	163	153	138	123	102
180 SX 102 /9	66	90		248	203	196	190	184	172	156	139	115
180 SX 102 /10	75	100		275	225	218	211	204	191	173	154	128
180 SX 102 /11	92	125		303	248	240	232	224	210	190	169	141
180 SX 102 /12	92	125		330	270	262	253	245	229	208	185	154
180 SX 102 /13	110	150		358	293	283	274	265	248	225	200	166
180 SX 102 /14	110	150		385	315	305	295	286	267	242	216	179
180 SX 102 /15	110	150		413	338	327	317	306	287	260	231	192

DIMENSIONI D'INGOMBRO E PESI - OVERALL DIMENSIONS AND WEIGHTS

Type	A mm Tri V 400	B mm	C mm Tri	M Kg Tri	P Kg
180 SX 102/1	1226	525	701	55	19
180 SX 102/2	1581	650	931	75	26
180 SX 102/3	1846	775	1071	92	33
180 SX 102/4	2151	900	1251	108	40
180 SX 102/5	2366	1025	1341	118	47
180 SX 102/6	2273	1150	1123	178	53
180 SX 102/7	2508	1275	1233	200	60
180 SX 102/8	2703	1400	1303	214	67
180 SX 102/9	2828	1525	1303	214	74
180 SX 102/10	3033	1650	1383	230	81
180 SX 102/11	3358	1775	1583	270	87
180 SX 102/12	3483	1900	1583	270	94
180 SX 102/13	3758	2025	1733	300	101
180 SX 102/14	3883	2150	1733	300	108
180 SX 102/15	4008	2275	1733	300	115

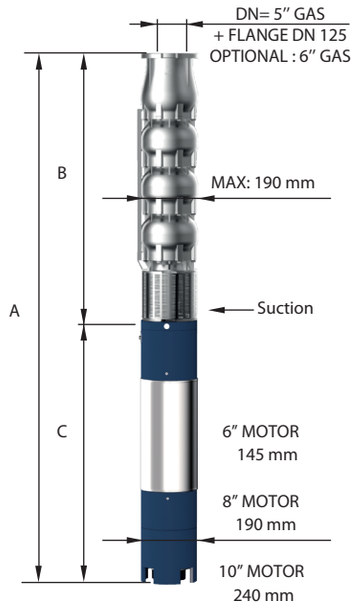

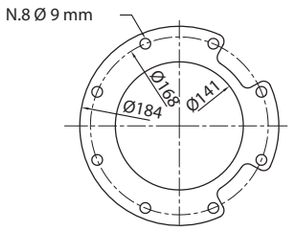

FOR COMMERCIAL TUBE
EXTERNAL DIAMETER: 139,7 mm

n% = Rendimento della pompa
n% = Rendement de la pompe
n% = Pump efficiency
n% = Rendimiento de la bomba

Max 77%

kW/st = Assorbimento per stadio
kW/st = Absorption par étage
kW/st = Stage absorption
kW/st = Potencia absorbida por etapa

Max 7,2

Tolleranza alla sabbia 50 g/m³ - Sand tolerance 50 g/m³ - Compatibilità con acqua potabile DM 174 Drinking water compatibility according to DM 174
Tolleranze secondo UNI ISO 9906 livello 3B - Tolerances according to UNI ISO 9906 grade 3B

PANELLI®

8" 180 SX102

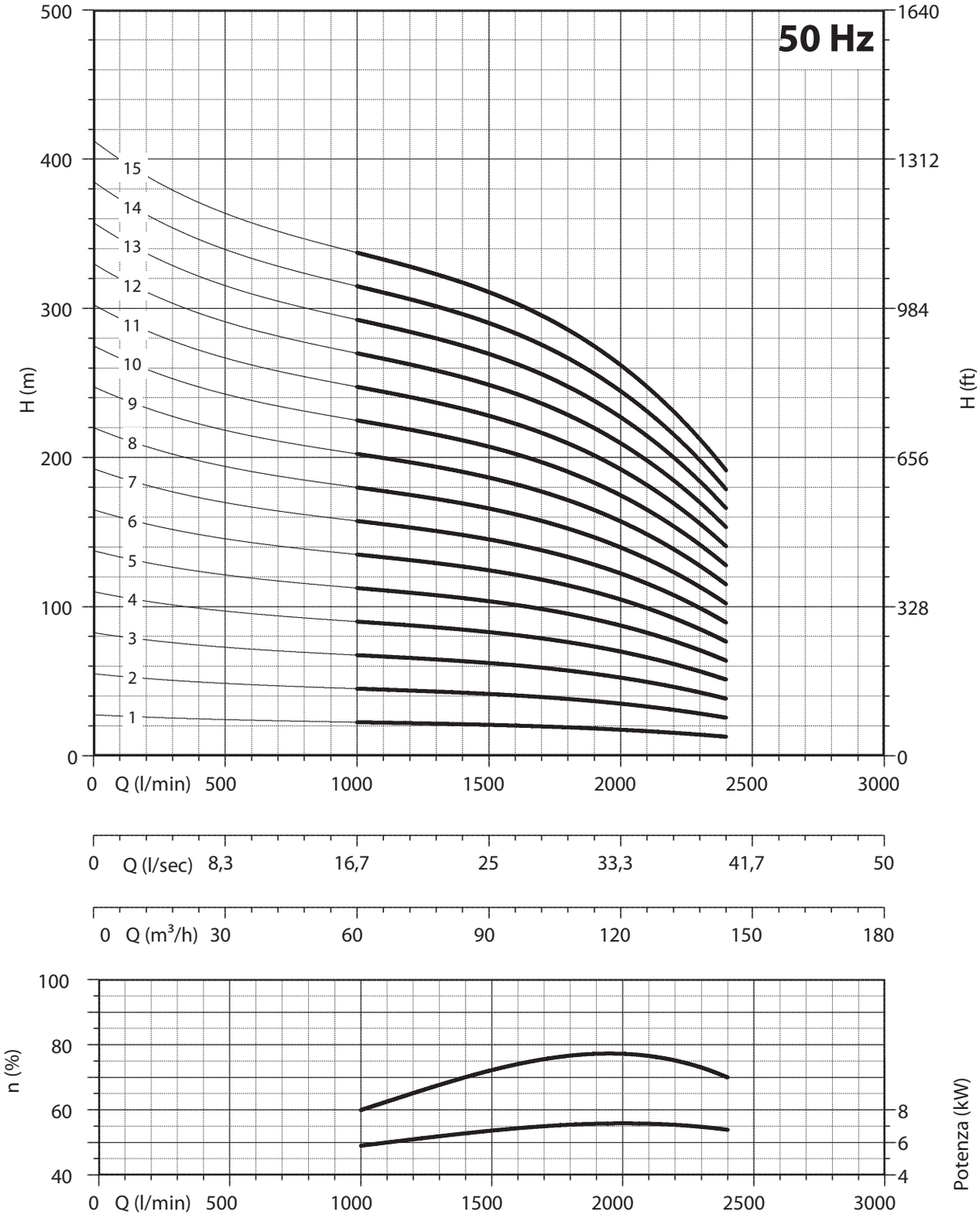

NPSH (m)	25%	50%	75%	100%
180 SX 102	2,5	2,9	3,9	7,8

acciaio inox microfuso - elevato rendimento - casted stainless steel - high efficiency

8″

180 SX124

PANELLI®

CARATTERISTICHE IDRAULICHE - HYDRAULIC PERFORMANCES

Q= Portata - Capacity - Debit **50 Hz n= 2900 min**

Tipo Type	Power kW	Power HP	l/min	0	1200	1400	1600	1800	2000	2200	2400	2600	2800
			l/sec	0	20	23,33	26,67	30	33,33	36,67	40	43,33	46,67
			m³/h	0	72	84	96	108	120	132	144	156	168
180 SX 124/1	9,20	12,5	H(m)	27	23	22	21	20	19	18	16	15	12
180 SX 124/2	18,50	25		54	45	43	41	40	38	36	33	29	24
180 SX 124/3	26	35		81	68	65	62	59	57	54	49	44	36
180 SX 124/4	37	50		108	90	86	83	79	76	72	66	58	48
180 SX 124/5	44	60		135	113	108	104	99	95	90	82	73	60
180 SX 124/6	55	75		162	135	129	124	119	114	108	98	87	72
180 SX 124/7	66	90		189	158	151	145	139	133	126	115	102	84
180 SX 124/8	66	90		216	180	172	166	158	152	144	131	116	96
180 SX 124/9	75	100		243	203	194	186	178	171	162	148	131	108
180 SX 124/10	92	125		270	225	215	207	198	190	180	164	145	120
180 SX 124/11	92	125		297	248	237	228	218	209	198	180	160	132
180 SX 124/12	110	150		324	270	258	248	238	228	216	197	174	144
180 SX 124/13	110	150		351	293	280	269	257	247	234	213	189	156

DIMENSIONI D'INGOMBRO E PESI - OVERALL DIMENSIONS AND WEIGHTS

Type	A mm Tri V 400	B mm	C mm Tri	M Kg Tri	P Kg
180 SX 124/1	1276	525	751	60	20
180 SX 124/2	1641	650	991	83	27
180 SX 124/3	1956	775	1181	100	34
180 SX 124/4	2241	900	1341	118	41
180 SX 124/5	2148	1025	1123	178	48
180 SX 124/6	2383	1150	1233	200	55
180 SX 124/7	2578	1275	1303	214	62
180 SX 124/8	2703	1400	1303	214	69
180 SX 124/9	2908	1525	1383	230	76
180 SX 124/10	3233	1650	1583	270	83
180 SX 124/11	3358	1775	1583	270	90
180 SX 124/12	3633	1900	1733	300	97
180 SX 124/13	3758	2025	1733	300	104

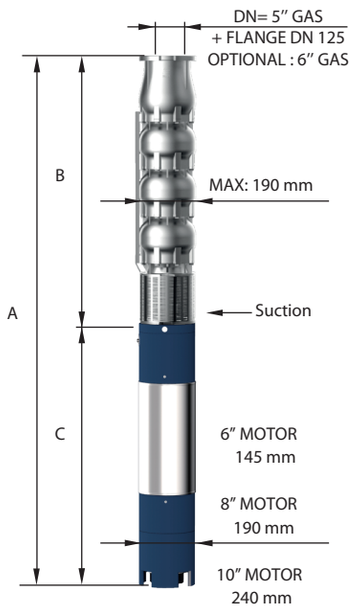

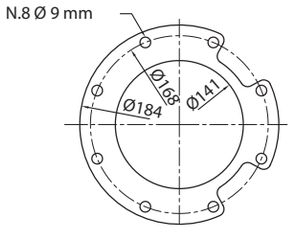

FOR COMMERCIAL TUBE
EXTERNAL DIAMETER: 139,7 mm

n% = Rendimento della pompa
n% = Rendement de la pompe
n% = Pump efficiency
n% = Rendimiento de la bomba

Max 78%

kW/st = Assorbimento per stadio
kW/st = Absorption par étage
kW/st = Stage absorption
kW/st = Potencia absorbida por etapa

Max 8,4

Tolleranza alla sabbia 50 g/m³ - Sand tolerance 50 g/m³ - Compatibilità con acqua potabile DM 174 Drinking water compatibility according to DM 174
Tolleranze secondo UNI ISO 9906 livello 3B - Tolerances according to UNI ISO 9906 grade 3B

PANELLI®

8" 180 SX124

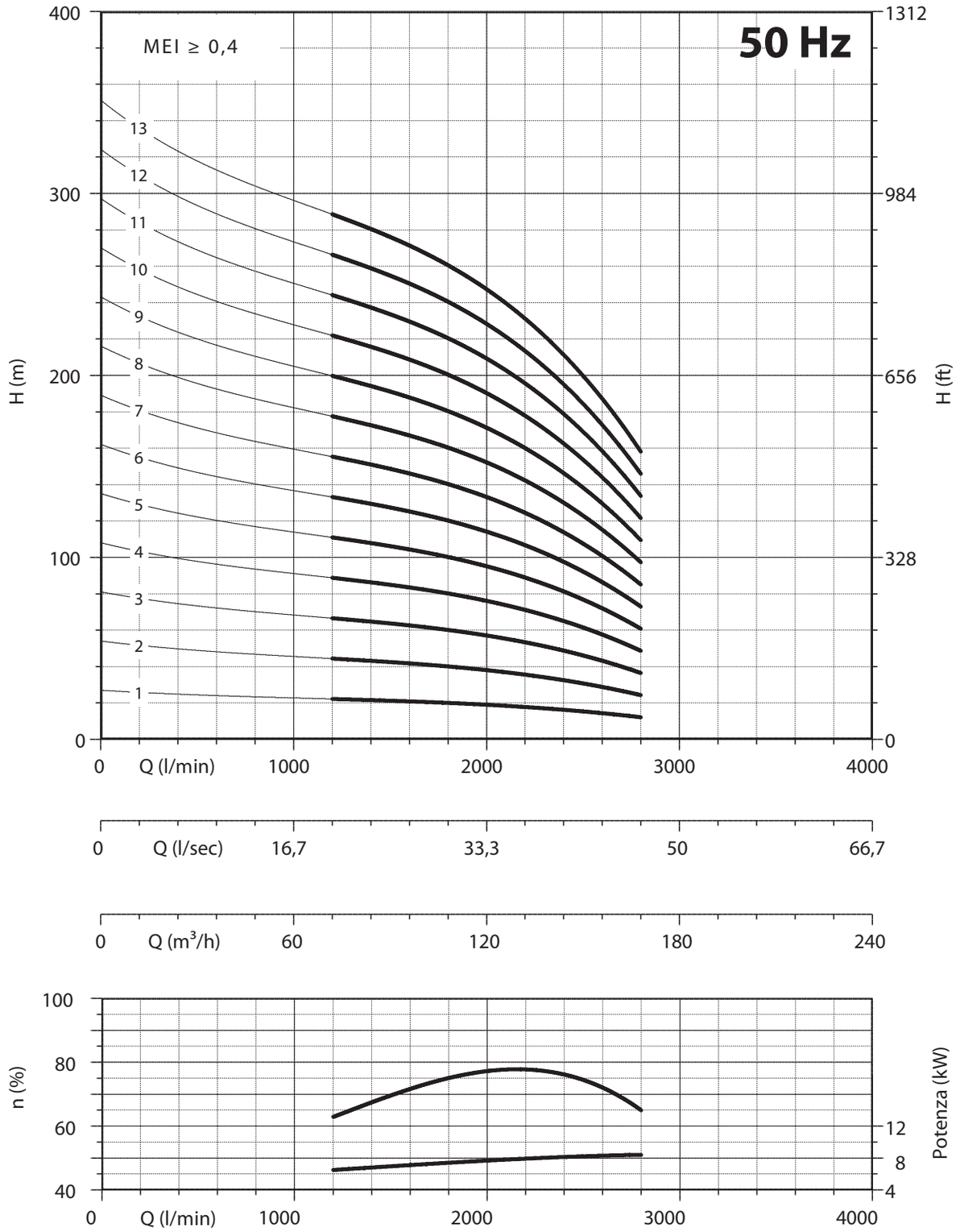

NPSH (m)	25%	50%	75%	100%
180 SX 124	2,5	3	3,5	8,7

acciaio inox microfuso - elevato rendimento - casted stainless steel - high efficiency

8″

180 SX140

PANELLI®

CARATTERISTICHE IDRAULICHE - HYDRAULIC PERFORMANCES

Q= Portata - Capacity - Debit **50 Hz n= 2900 min**

Tipo Type	Power kW	Power HP	l/min	0	1600	1800	2000	2200	2400	2600	2800	3000	3200
			l/sec	0	26,67	30	33,33	36,67	40	43,33	46,67	50	53,33
			m³/h	0	96	108	120	132	144	156	168	180	192
180 SX 140/1	9,20	12,5	H(m)	25	20	19	19	18	17	17	16	14	12
180 SX 140/2	18,50	25		50	40	39	38	36	35	33	31	28	24
180 SX 140/3	30	40		75	60	58	56	54	52	50	47	41	36
180 SX 140/4	37	50		100	80	77	75	72	70	66	62	55	48
180 SX 140/5	55	75		125	100	97	94	91	87	83	78	69	60
180 SX 140/6	55	75		150	120	116	113	109	104	100	93	83	72
180 SX 140/7	66	90		175	140	135	132	127	122	116	109	97	84
180 SX 140/8	75	100		200	160	154	150	145	139	133	124	110	96
180 SX 140/9	92	125		225	180	174	169	163	157	149	140	124	108
180 SX 140/10	110	150		250	200	193	188	181	174	166	155	138	120
180 SX 140/11	110	150		275	220	212	207	199	191	183	171	152	132
180 SX 140/12	110	150		300	240	232	226	217	209	199	186	166	144

DIMENSIONI D'INGOMBRO E PESI - OVERALL DIMENSIONS AND WEIGHTS

Type	A mm Tri V 400	B mm	C mm Tri	M Kg Tri	P Kg
180 SX 140/1	1301	550	751	60	20
180 SX 140/2	1691	700	991	83	28
180 SX 140/3	2101	850	1251	108	35
180 SX 140/4	2341	1000	1341	118	43
180 SX 140/5	2383	1150	1233	200	50
180 SX 140/6	2533	1300	1233	200	58
180 SX 140/7	2753	1450	1303	214	65
180 SX 140/8	2983	1600	1383	230	73
180 SX 140/9	3333	1750	1583	270	80
180 SX 140/10	3633	1900	1733	300	88
180 SX 140/11	3783	2050	1733	300	95
180 SX 140/12	3933	2200	1733	300	103

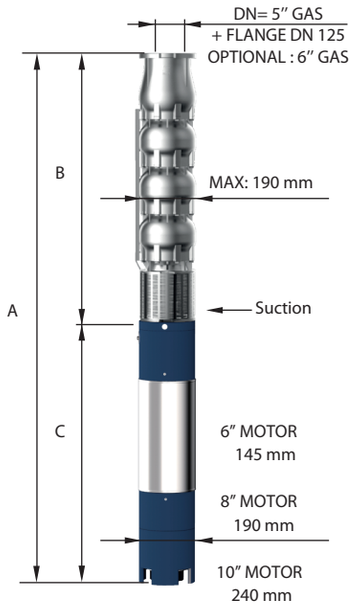

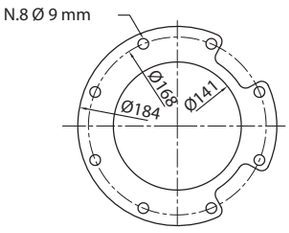

FOR COMMERCIAL TUBE
EXTERNAL DIAMETER: 139,7 mm

n% = Rendimento della pompa
n% = Rendement de la pompe
n% = Pump efficiency
n% = Rendimiento de la bomba

Max 78,5%

kW/st = Assorbimento per stadio
kW/st = Absorption par étage
kW/st = Stage absorption
kW/st = Potencia absorbida por etapa

Max 9,4

Tolleranza alla sabbia 50 g/m³ - Sand tolerance 50 g/m³ - Compatibilità con acqua potabile DM 174 Drinking water compatibility according to DM 174
Tolleranze secondo UNI ISO 9906 livello 3B - Tolerances according to UNI ISO 9906 grade 3B

PANELLI®

8" 180 SX140

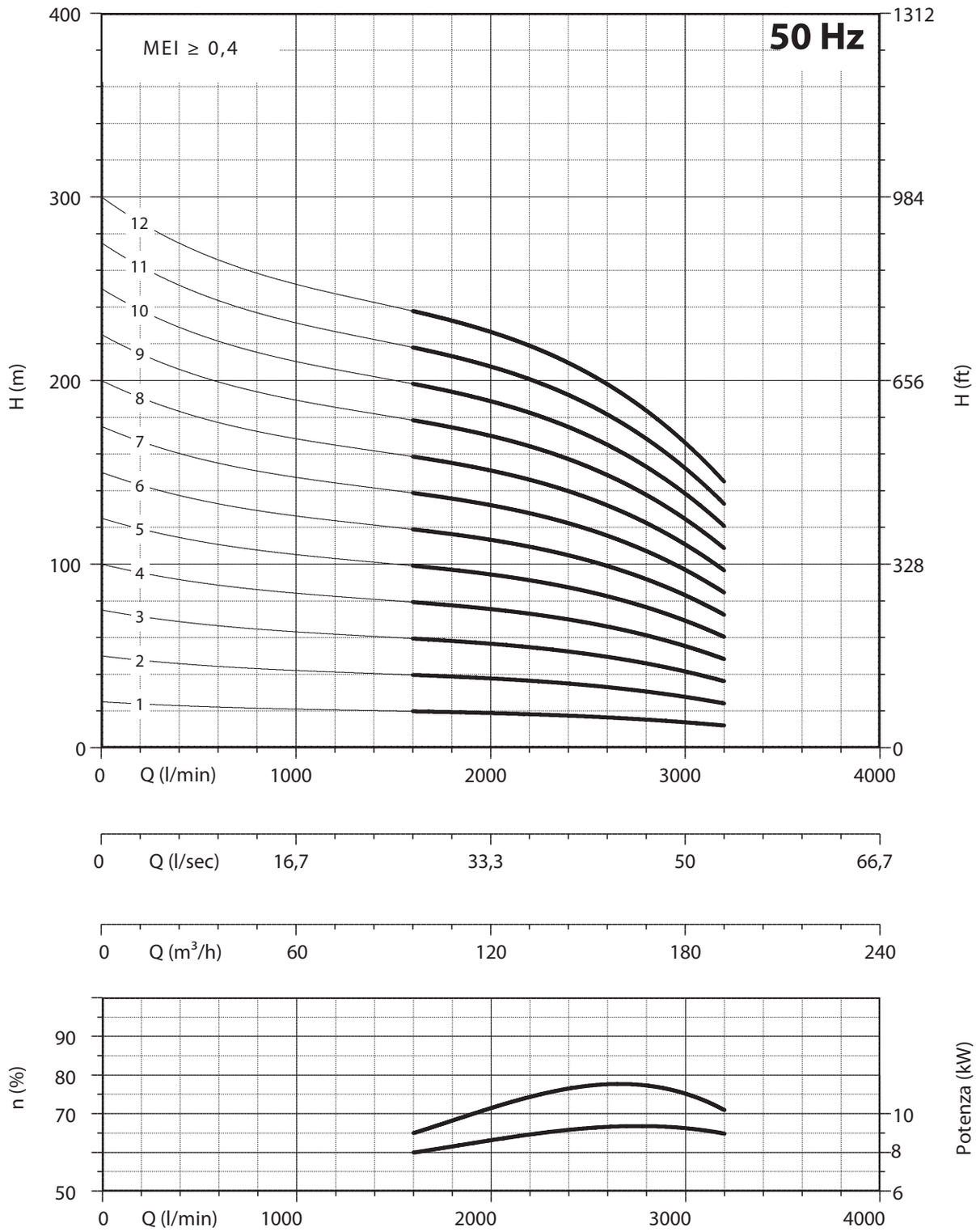

NPSH (m)	25%	50%	75%	100%
180 SX 140	4	4,5	7	13

acciaio inox microfuso - elevato rendimento - casted stainless steel - high efficiency

10" 230 SX200

PANELLI®

CARATTERISTICHE IDRAULICHE - HYDRAULIC PERFORMANCES

Q= Portata - Capacity - Debit **50 Hz n= 2900 min**

Tipo Type	Power kW	Power HP	l/min	0	1800	2200	2600	3000	3400	3800	4000
			l/sec	0	30	36,67	43,33	50	56,67	63,33	66,67
			m³/h	0	108	132	156	180	204	228	240
230 SX 200/1 DR 20	18,5	25	H(m)	35	32	30	27	24	21	16	14
230 SX 200/1 DR 10	18,5	25		38	35	33	31	28	24	20	17
230 SX 200/1	22	30		42	38	36	34	31	28	23	21
230 SX 200/2 DR 20	37	50		69	63	60	55	49	41	33	28
230 SX 200/2 DR 10	37	50		76	70	66	61	55	48	40	35
230 SX 200/2	44	60		83	77	73	68	62	55	47	41
230 SX 200/3 DR 20	55	75		104	95	89	82	73	62	49	42
230 SX 200/3 DR 10	55	75		114	105	99	92	83	72	59	52
230 SX 200/3	66	90		125	115	109	102	93	83	70	62
230 SX 200/4 DR 20	66	90		138	126	119	110	98	82	66	56
230 SX 200/4 DR 10	75	100		152	140	132	122	110	96	79	70
230 SX 200/4	92	125		166	154	146	136	124	110	94	82
230 SX 200/5 DR 20	92	125		173	158	149	137	122	103	82	70
230 SX 200/5 DR 10	92	125		190	175	165	153	138	120	99	87
230 SX 200/5	110	150		208	192	182	170	155	138	117	103

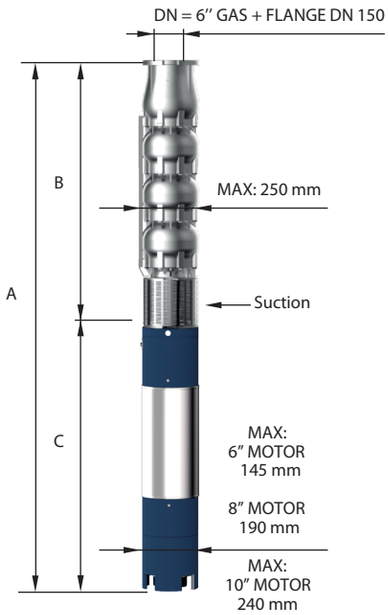

DIMENSIONI D'INGOMBRO E PESI - OVERALL DIMENSIONS AND WEIGHTS

Type	A mm Tri V 400	B mm	C mm Tri	M Kg Tri	P Kg
230 SX 200/1 DR 20	1616	625	991	83	41
230 SX 200/1 DR 10	1616	625	991	83	41
230 SX 200/1	1696	625	1071	92	41
230 SX 200/2 DR 20	2146	805	1341	118	56
230 SX 200/2 DR 10	2146	805	1341	118	56
230 SX 200/2	1928	805	1123	178	56
230 SX 200/3 DR 20	2218	985	1233	200	72
230 SX 200/3 DR 10	2218	985	1233	200	72
230 SX 200/3	2288	985	1303	214	72
230 SX 200/4 DR 20	2468	1165	1303	214	87
230 SX 200/4 DR 10	2548	1165	1383	230	87
230 SX 200/4	2748	1165	1583	270	87
230 SX 200/5 DR 20	2928	1345	1583	270	103
230 SX 200/5 DR 10	2928	1345	1583	270	103
230 SX 200/5	3078	1345	1733	300	103

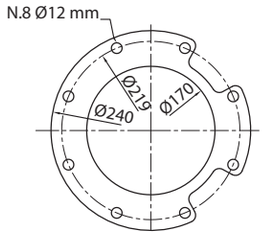

FOR COMMERCIAL TUBE
EXTERNAL DIAMETER: 168,3 mm

	Max	DR 10	DR 20
n% = Rendimento della pompa *n% = Rendement de la pompe* n% = Pump efficiency *n% = Rendimiento de la bomba*	**77%**	**Max 77,5%**	**Max 76,5%**
kW/st = Assorbimento per stadio *kW/st = Absorption par étage* kW/st = Stage absorption *kW/st = Potencia absorbida por etapa*	**20,8**	**Max 18,5**	**Max 16**

Tolleranza alla sabbia 50 g/m³ - Sand tolerance 50 g/m³ - Compatibilità con acqua potabile DM 174 Drinking water compatibility according to DM 174
Tolleranze secondo UNI ISO 9906 livello 3B - Tolerances according to UNI ISO 9906 grade 3B

PANELLI® 10" 230 SX200

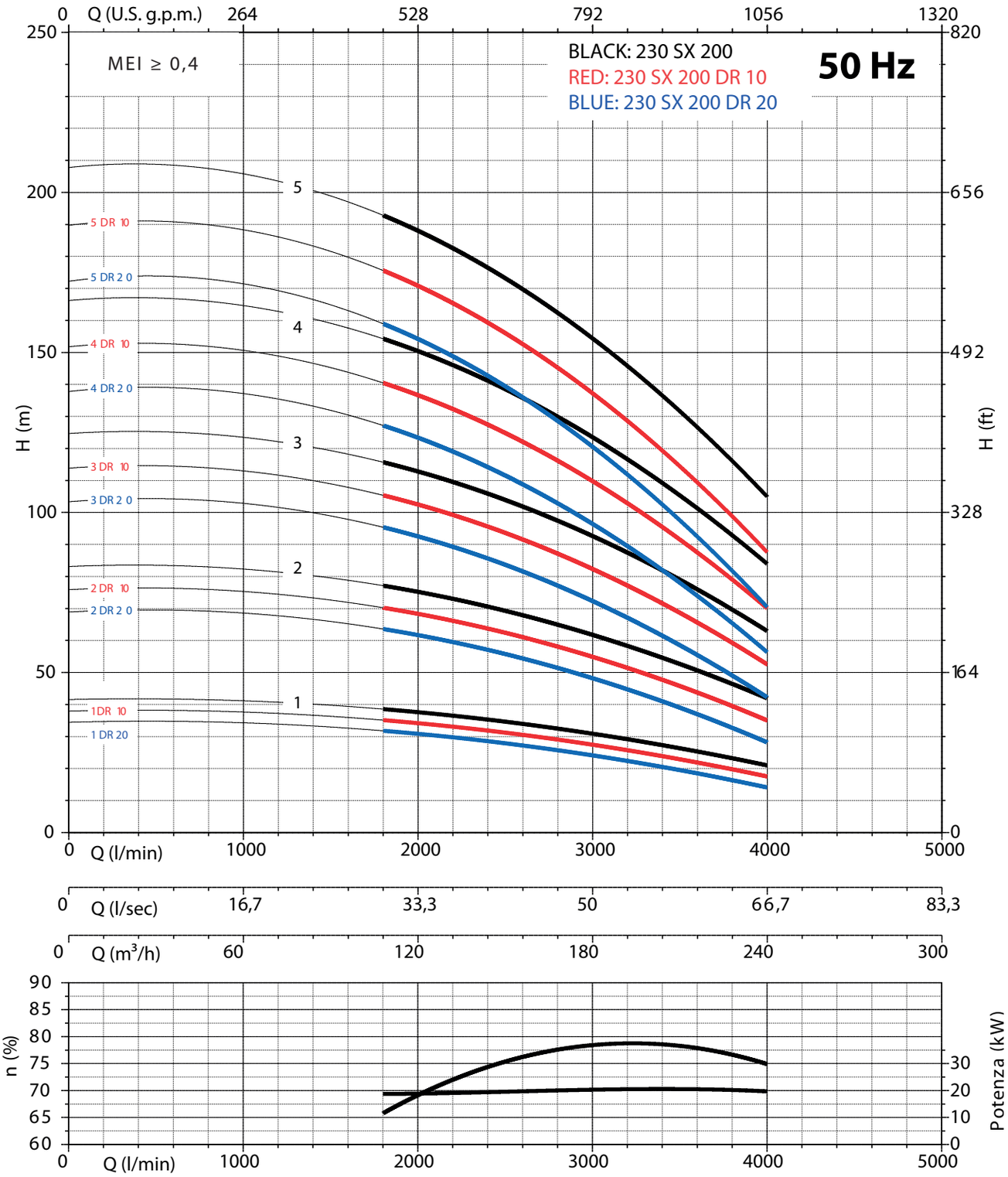

NPSH (m)	25%	50%	75%	100%
230 SX 200	3,4	5	7,8	11,8

acciaio inox microfuso - elevato rendimento - casted stainless steel - high efficiency

10" 230 SX200

PANELLI®

CARATTERISTICHE IDRAULICHE - HYDRAULIC PERFORMANCES

Q= Portata - Capacity - Debit **50 Hz n= 2900 min**

Tipo Type	Power kW	Power HP	l/min	0	1800	2200	2600	3000	3400	3800	4000
			l/sec	0	30	36,67	43,33	50	56,67	63,33	66,67
			m³/h	0	108	132	156	180	204	228	240
230 SX 200/6 DR 20	110	150	H(m)	208	190	179	164	146	124	98	84
230 SX 200/6 DR 10	110	150		228	210	198	184	166	144	119	104
230 SX 200/6	129	175		250	230	218	204	186	166	140	124
230 SX 200/7 DR 20	110	150		242	221	209	192	171	144	115	98
230 SX 200/7 DR 10	129	175		266	245	231	214	193	168	139	122
230 SX 200/7	147	200		291	269	255	238	217	193	164	144
230 SX 200/8 DR 20	129	175		277	253	238	219	195	165	131	112
230 SX 200/8 DR 10	147	200		304	280	264	245	221	192	158	139
230 SX 200/8	165	225		333	307	291	272	248	221	187	165
230 SX 200/9 DR 20	147	200		311	284	268	247	220	185	148	126
230 SX 200/9 DR 10	165	225		342	315	297	275	248	216	178	157
230 SX 200/9	185	250		374	346	328	306	279	248	211	185

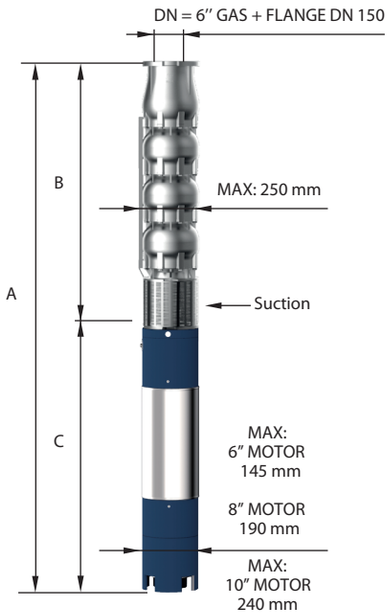

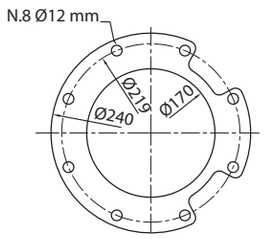

FOR COMMERCIAL TUBE
EXTERNAL DIAMETER: 168,3 mm

DIMENSIONI D'INGOMBRO E PESI - OVERALL DIMENSIONS AND WEIGHTS

Type	A mm Tri V 400	B mm	C mm Tri	M Kg Tri	P Kg
230 SX 200/6 DR 20	3258	1525	1733	300	118
230 SX 200/6 DR 10	3258	1525	1733	300	118
230 SX 200/6	3159	1525	1634	385	118
230 SX 200/7 DR 20	3438	1705	1733	300	134
230 SX 200/7 DR 10	3339	1705	1634	385	134
230 SX 200/7	3439	1705	1734	415	134
230 SX 200/8 DR 20	3519	1885	1634	385	149
230 SX 200/8 DR 10	3619	1885	1734	415	149
230 SX 200/8	3739	1885	1854	444	149
230 SX 200/9 DR 20	3799	2065	1734	415	165
230 SX 200/9 DR 10	3919	2065	1854	444	165
230 SX 200/9	4049	2065	1984	480	165

	Max	DR 10	DR 20
n% = Rendimento della pompa ***n% = Rendement de la pompe*** **n% = Pump efficiency** ***n% = Rendimiento de la bomba***	**77%**	**Max 77,5%**	**Max 76,5%**
kW/st = Assorbimento per stadio ***kW/st = Absorption par étage*** **kW/st = Stage absorption** ***kW/st = Potencia absorbida por etapa***	**20,8**	**Max 18,5**	**Max 16**

Tolleranza alla sabbia 50 g/m³ - Sand tolerance 50 g/m³ - Compatibilità con acqua potabile DM 174 Drinking water compatibility according to DM 174
Tolleranze secondo UNI ISO 9906 livello 3B - Tolerances according to UNI ISO 9906 grade 3B

PANELLI®

10" 230 SX200

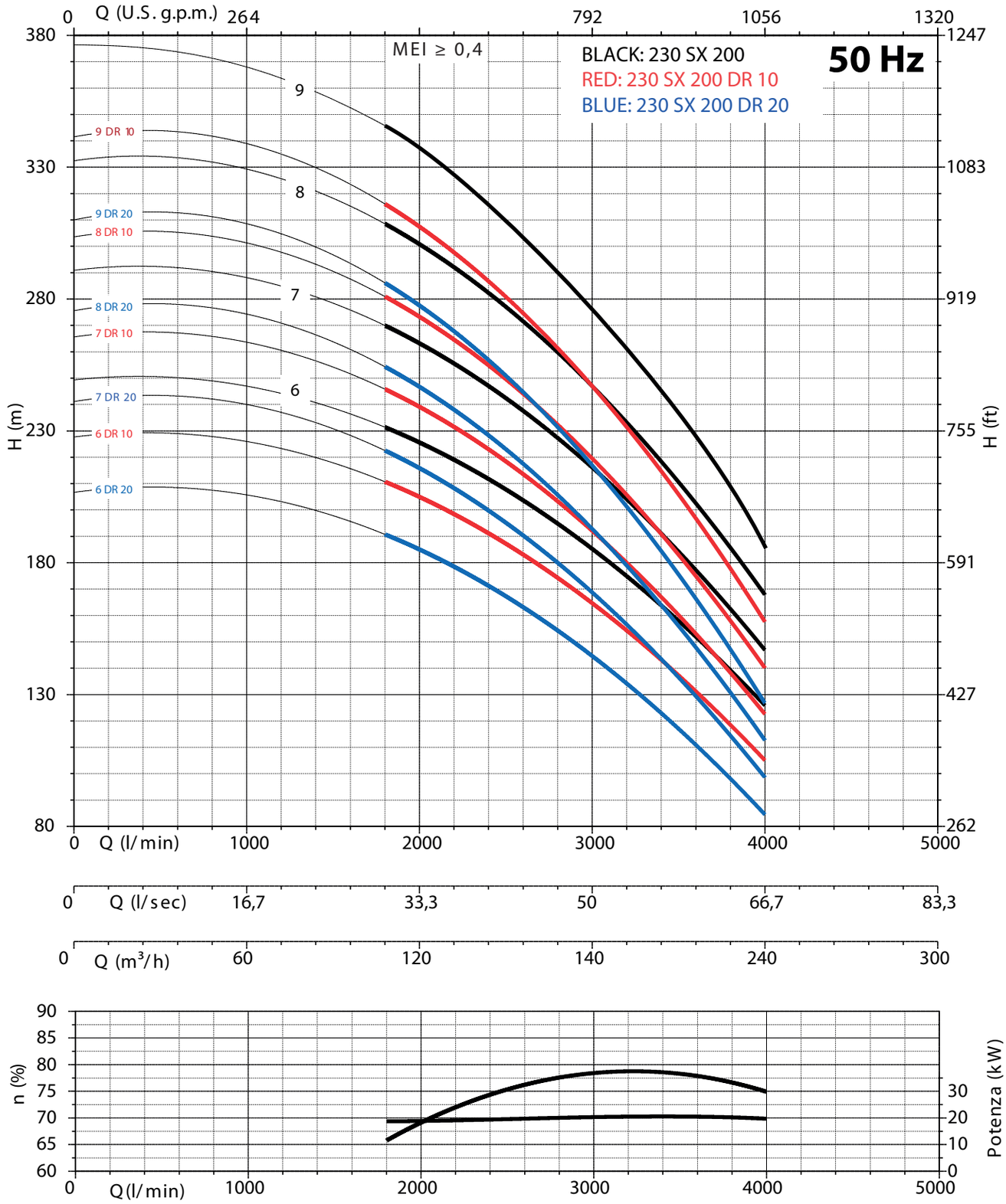

NPSH (m)	25%	50%	75%	100%
230 SX 200	3,4	5	7,8	11,8

10" 230 SX220

PANELLI®

CARATTERISTICHE IDRAULICHE - HYDRAULIC PERFORMANCES

Q= Portata - Capacity - Debit **50 Hz n= 2900 min**

Tipo Type	Power kW	Power HP	l/min	0	2200	2600	3000	3400	3800	4200	4600
			l/sec	0	36,67	43,33	50	56,67	63,33	70	76,67
			m³/h	0	132	156	180	204	228	252	276
230 SX 220/1 DR 20	18,5	25		37	31	29	27	25	23	19	16
230 SX 220/1 DR 10	22	30		40	34	33	31	29	26	23	20
230 SX 220/1	22	30		44	38	36	34	32	30	26	23
230 SX 220/2 DR 20	37	50		74	62	58	54	50	45	38	32
230 SX 220/2 DR 10	44	60		81	68	65	61	57	52	46	39
230 SX 220/2	44	60		88	75	72	68	64	59	53	46
230 SX 220/3 DR 20	55	75		110	93	87	81	75	68	57	48
230 SX 220/3 DR 10	66	90		121	102	98	92	86	78	68	59
230 SX 220/3	75	100		131	113	108	102	96	89	79	69
230 SX 220/4 DR 20	75	100		147	124	116	108	100	90	76	64
230 SX 220/4 DR 10	92	125	H(m)	162	136	130	122	114	104	91	78
230 SX 220/4	92	125		175	150	144	136	128	118	106	92
230 SX 220/5 DR 20	92	125		184	155	145	135	125	113	95	80
230 SX 220/5 DR 10	110	150		202	170	163	153	143	130	114	98
230 SX 220/5	129	175		219	188	180	170	160	148	132	115
230 SX 220/6 DR 20	110	150		221	186	174	162	150	136	114	96
230 SX 220/6 DR 10	129	175		242	204	196	184	172	156	137	118
230 SX 220/6	147	200		263	226	216	204	192	178	158	138
230 SX 220/7 DR 20	129	175		258	217	203	189	175	158	133	112
230 SX 220/7 DR 10	147	200		283	238	228	214	200	182	160	137
230 SX 220/7	165	225		307	263	252	238	224	207	185	161

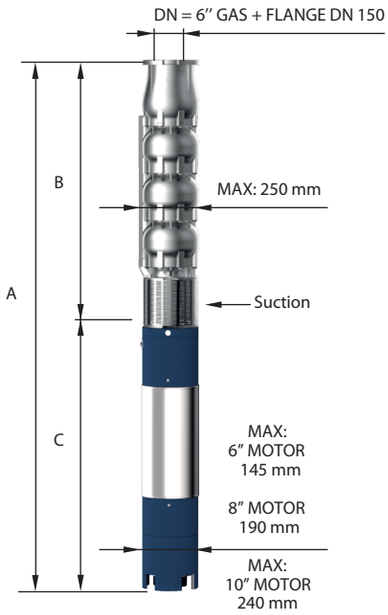

DIMENSIONI D'INGOMBRO E PESI - OVERALL DIMENSIONS AND WEIGHTS

Type	A mm Tri V 400	B mm	C mm Tri	M Kg Tri	P Kg
230 SX 220/1 DR 20	1616	625	991	83	41
230 SX 220/1 DR 10	1696	625	1071	92	41
230 SX 220/1	1696	625	1071	92	41
230 SX 220/2 DR 20	2146	805	1341	118	56
230 SX 220/2 DR 10	1928	805	1123	178	56
230 SX 220/2	1928	805	1123	178	56
230 SX 220/3 DR 20	2218	985	1233	200	72
230 SX 220/3 DR 10	2288	985	1303	214	72
230 SX 220/3	2368	985	1383	230	72
230 SX 220/4 DR 20	2548	1165	1383	230	87
230 SX 220/4 DR 10	2748	1165	1583	270	87
230 SX 220/4	2748	1165	1583	270	87
230 SX 220/5 DR 20	2928	1345	1583	270	103
230 SX 220/5 DR 10	3078	1345	1733	300	103
230 SX 220/5	2979	1345	1634	385	103
230 SX 220/6 DR 20	3258	1525	1733	300	118
230 SX 220/6 DR 10	3159	1525	1634	385	118
230 SX 220/6	3259	1525	1734	415	118
230 SX 220/7 DR 20	3339	1705	1634	385	134
230 SX 220/7 DR 10	3439	1705	1734	415	134
230 SX 220/7	3559	1705	1854	444	134

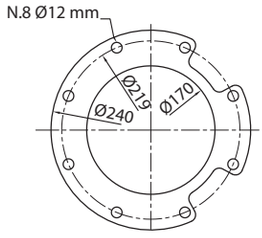

FOR COMMERCIAL TUBE
EXTERNAL DIAMETER: 168,3 mm

	Max	DR 10	DR 20
n% = Rendimento della pompa *n% = Rendement de la pompe* n% = Pump efficiency *n% = Rendimiento de la bomba*	**79,2%**	**Max 79,5%**	**Max 78,4%**
kW/st = Assorbimento per stadio *kW/st = Absorption par étage* kW/st = Stage absorption *kW/st = Potencia absorbida por etapa*	**22,8**	**Max 19,5**	**Max 17,5**

Tolleranza alla sabbia 50 g/m³ - Sand tolerance 50 g/m³ - Compatibilità con acqua potabile DM 174 Drinking water compatibility according to DM 174
Tolleranze secondo UNI ISO 9906 livello 3B - Tolerances according to UNI ISO 9906 grade 3B

PANELLI®

10" 230 SX220

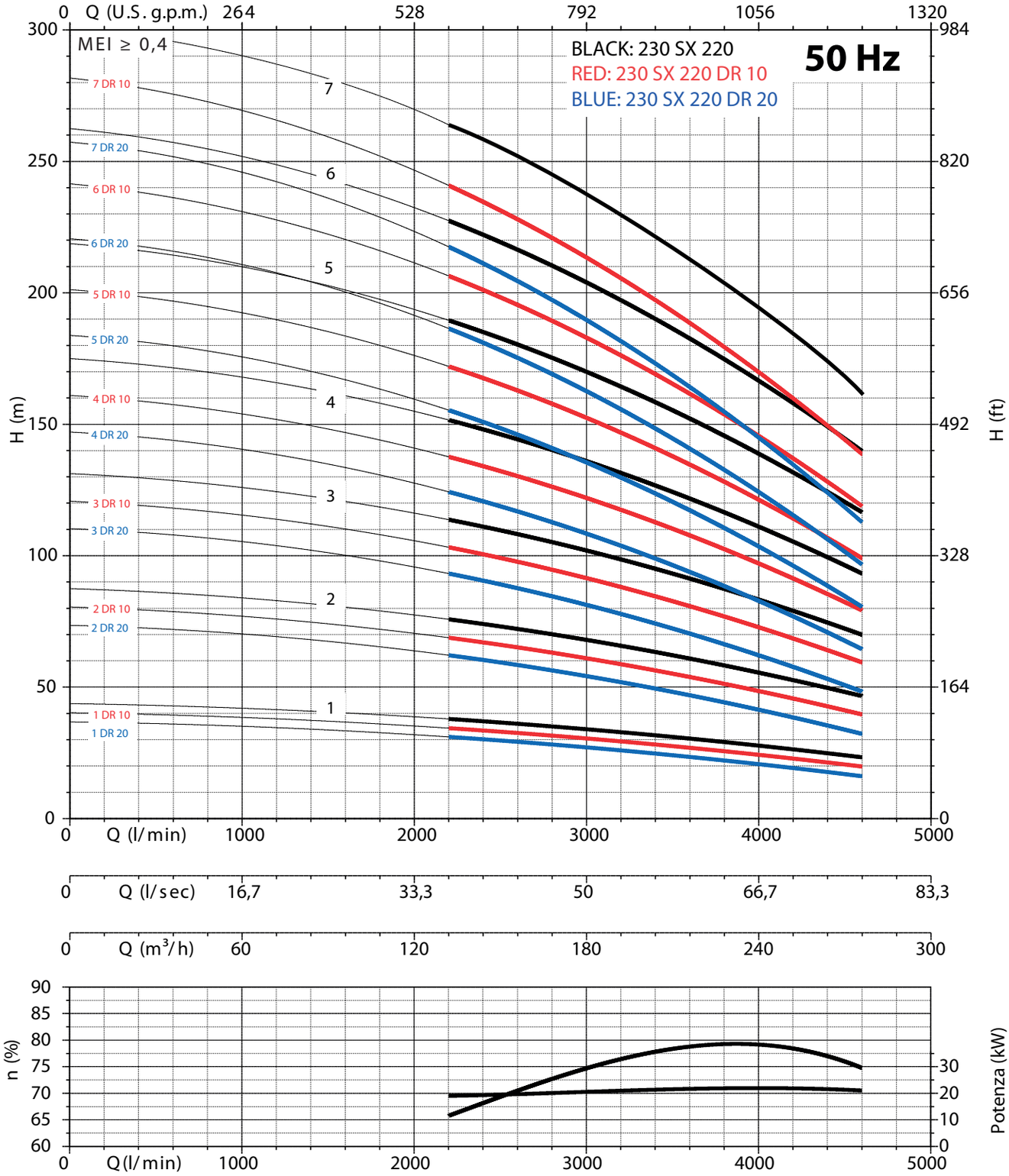

NPSH (m)	25%	50%	75%	100%
230 SX 220	3,4	5	7,8	11,8

acciaio inox microfuso - elevato rendimento - casted stainless steel - high efficiency

10" 230 SX240

PANELLI®

CARATTERISTICHE IDRAULICHE - HYDRAULIC PERFORMANCES

Q= Portata - Capacity - Debit **50 Hz n= 2900 min**

Tipo Type	Power kW	Power HP	l/min	0	2400	2800	3200	3600	4000	4400	4800	5000	5200
			l/sec	0	40	46,67	53,33	60	66,67	73,33	80	83,33	86,67
			m³/h	0	144	168	192	216	240	264	288	300	312
230 SX 240/1 DR 20	18,5	25	H(m)	31	29	28	27	25	23	21	18		
230 SX 240/1 DR 10	22	30		36	33	32	31	29	27	24	22	20	
230 SX 240/1	30	40		44	37	35	34	32	30	28	26	25	24
230 SX 240/2 DR 20	37	50		62	58	56	54	50	46	42	36		
230 SX 240/2 DR 10	44	60		72	66	64	62	58	54	48	44	40	
230 SX 240/2	55	75		88	73	69	67	64	59	56	52	50	48
230 SX 240/3 DR 20	55	75		94	88	85	81	76	70	63	53		
230 SX 240/3 DR 10	66	90		107	100	97	93	86	80	73	65	59	
230 SX 240/3	92	125		132	110	104	101	96	89	83	78	75	72
230 SX 240/4 DR 20	75	100		125	117	113	108	101	93	84	71		
230 SX 240/4 DR 10	92	125		143	133	129	124	115	107	97	87	79	
230 SX 240/4	110	150		176	146	138	134	128	118	111	104	100	96
230 SX 240/5 DR 20	92	125		156	146	141	135	126	116	105	89		
230 SX 240/5 DR 10	110	150		179	166	161	155	144	134	121	109	99	
230 SX 240/5	147	200		220	183	173	168	160	148	139	130	125	120
230 SX 240/6 DR 20	110	150		187	175	169	162	151	139	126	107		
230 SX 240/6 DR 10	147	200		215	199	193	186	173	161	145	131	119	
230 SX 240/6	165	225		264	220	208	202	192	178	167	156	150	144
230 SX 240/7 DR 20	129	175		218	204	197	189	176	162	147	125		
230 SX 240/7 DR 10	165	225		251	232	225	217	202	188	169	153	139	
230 SX 240/7	220	300		308	256	242	235	224	207	195	182	175	168

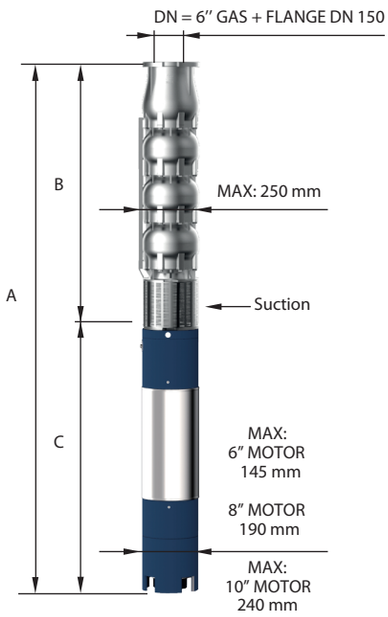

DIMENSIONI D'INGOMBRO E PESI - OVERALL DIMENSIONS AND WEIGHTS

Type	A mm Tri V 400	B mm	C mm Tri	M Kg Tri	P Kg
230 SX 240/1 DR 20	1616	625	991	83	41
230 SX 240/1 DR 10	1696	625	1071	92	41
230 SX 240/1	1876	625	1251	108	41
230 SX 240/2 DR 20	2146	805	1341	118	56
230 SX 240/2 DR 10	1928	805	1123	178	56
230 SX 240/2	2038	805	1233	200	56
230 SX 240/3 DR 20	2218	985	1233	200	72
230 SX 240/3 DR 10	2288	985	1303	214	72
230 SX 240/3	2568	985	1583	270	72
230 SX 240/4 DR 20	2548	1165	1383	230	87
230 SX 240/4 DR 10	2748	1165	1583	270	87
230 SX 240/4	2898	1165	1733	300	87
230 SX 240/5 DR 20	2928	1345	1583	270	103
230 SX 240/5 DR 10	3078	1345	1733	300	103
230 SX 240/5	3079	1345	1734	415	103
230 SX 240/6 DR 20	3258	1525	1733	300	118
230 SX 240/6 DR 10	3259	1525	1734	415	118
230 SX 240/6	3379	1525	1854	444	118
230 SX 240/7 DR 20	3339	1705	1634	385	134
230 SX 240/7 DR 10	3559	1705	1854	444	134
230 SX 240/7	0	1705	0	0	134

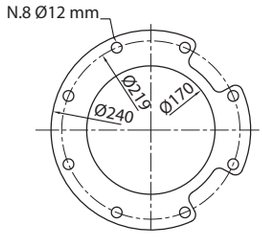

FOR COMMERCIAL TUBE
EXTERNAL DIAMETER: 168,3 mm

	Max	DR 10	DR 20
n% = Rendimento della pompa *n% = Rendement de la pompe* n% = Pump efficiency *n% = Rendimiento de la bomba*	**79,3%**	**Max 79,5%**	**Max 79%**
kW/st = Assorbimento per stadio *kW/st = Absorption par étage* kW/st = Stage absorption *kW/st = Potencia absorbida por etapa*	**27,5**	**Max 22,5**	**Max 18**

Tolleranza alla sabbia 50 g/m³ - Sand tolerance 50 g/m³ - Compatibilità con acqua potabile DM 174 Drinking water compatibility according to DM 174
Tolleranze secondo UNI ISO 9906 livello 3B - Tolerances according to UNI ISO 9906 grade 3B

PANELLI® 10" 230 SX240

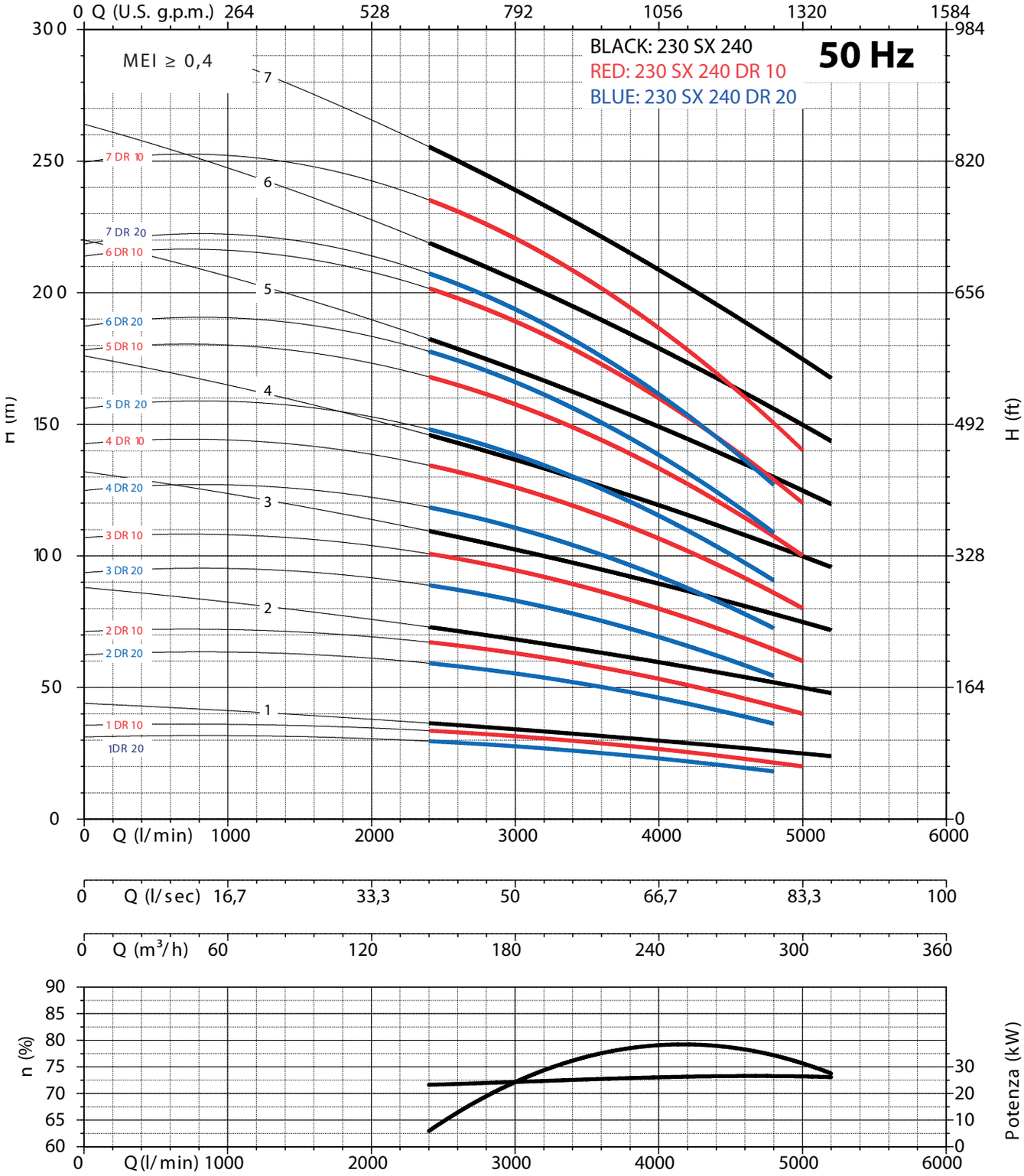

NPSH (m)	25%	50%	75%	100%
230 SX 240	3,4	5	7,8	11,8

acciaio inox microfuso - elevato rendimento - casted stainless steel - high efficiency

10" 230 SX280

PANELLI®

CARATTERISTICHE IDRAULICHE - HYDRAULIC PERFORMANCES

Q= Portata - Capacity - Debit **50 Hz n= 2900 min**

Tipo Type	Power kW	Power HP	l/min	0	3000	3400	3800	4200	4600	5000	5400	5800
			l/sec	0	50	56,67	63,33	70	76,67	83,33	90	96,67
			m^3/h	0	180	204	228	252	276	300	324	348
230 SX 280/1 DR 20	26	35	H(m)	36	29	28	26	25	23	21	19	16
230 SX 280/1 DR 10	30	40		41	33	32	31	29	27	26	24	21
230 SX 280/1	44	60		45	38	37	35	34	32	30	28	25
230 SX 280/2 DR 20	55	75		72	58	56	52	50	46	42	39	32
230 SX 280/2 DR 10	66	90		82	67	65	62	59	55	52	48	42
230 SX 280/2	66	90		90	75	73	70	67	63	60	56	50
230 SX 280/3 DR 20	75	100		109	86	83	79	74	68	64	58	49
230 SX 280/3 DR 10	92	125		122	100	97	92	88	82	77	72	62
230 SX 280/3	110	150		135	113	110	105	101	95	90	85	75
230 SX 280/4 DR 20	110	150		145	115	111	105	99	91	85	78	65
230 SX 280/4 DR 10	129	175		163	134	130	123	118	110	103	96	83
230 SX 280/4	129	175		180	150	146	140	134	126	120	113	100
230 SX 280/5 DR 20	129	175		181	144	139	131	124	114	106	97	81
230 SX 280/5 DR 10	147	200		204	167	162	154	147	137	129	120	104
230 SX 280/5	165	225		225	188	183	175	168	158	150	141	125
230 SX 280/6 DR 20	147	200		217	173	167	157	149	137	127	116	97
230 SX 280/6 DR 10	185	250		245	200	194	185	176	164	155	144	125
230 SX 280/6	220	300		270	226	220	210	202	190	180	169	150
230 SX 280/7 DR 20	185	250		253	202	195	183	174	160	148	136	113
230 SX 280/7 DR 10	220	300		286	234	227	216	206	192	181	168	146
230 SX 280/7	250	340		315	263	256	245	235	221	210	197	175

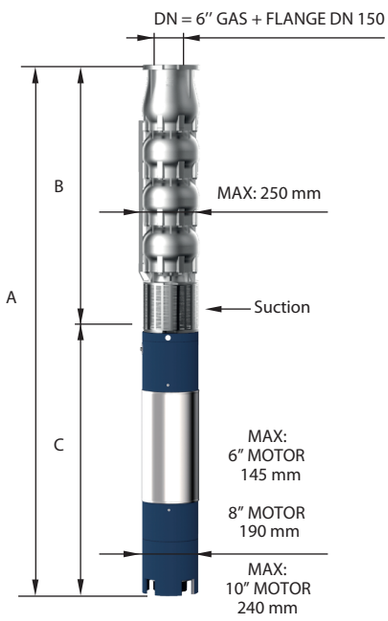

DIMENSIONI D'INGOMBRO E PESI - OVERALL DIMENSIONS AND WEIGHTS

Type	A mm Tri V 400	B mm	C mm Tri	M Kg Tri	P Kg
230 SX 280/1 DR 20	1806	625	1181	100	41
230 SX 280/1 DR 10	1876	625	1251	108	41
230 SX 280/1	1748	625	1123	178	41
230 SX 280/2 DR 20	2038	805	1233	200	56
230 SX 280/2 DR 10	2108	805	1303	214	56
230 SX 280/2	2108	805	1303	214	56
230 SX 280/3 DR 20	2368	985	1383	230	72
230 SX 280/3 DR 10	2568	985	1583	270	72
230 SX 280/3	2718	985	1733	300	72
230 SX 280/4 DR 20	2898	1165	1733	300	87
230 SX 280/4 DR 10	2799	1165	1634	385	87
230 SX 280/4	2799	1165	1634	385	87
230 SX 280/5 DR 20	2979	1345	1634	385	103
230 SX 280/5 DR 10	3079	1345	1734	415	103
230 SX 280/5	3199	1345	1854	444	103
230 SX 280/6 DR 20	3259	1525	1734	415	118
230 SX 280/6 DR 10	3509	1525	1984	480	118
230 SX 280/6	0	1525	0	0	118
230 SX 280/7 DR 20	0	1705	0	0	134
230 SX 280/7 DR 10	0	1705	0	0	134
230 SX 280/7	0	1705	0	0	134

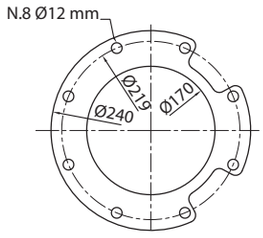

FOR COMMERCIAL TUBE
EXTERNAL DIAMETER: 168,3 mm

	Max	DR 10	DR 20
n% = Rendimento della pompa *n% = Rendement de la pompe* n% = Pump efficiency *n% = Rendimiento de la bomba*	76,5%	Max 77,2%	Max 76,1%
kW/st = Assorbimento per stadio *kW/st = Absorption par étage* kW/st = Stage absorption *kW/st = Potencia absorbida por etapa*	33	Max 29	Max 25

Tolleranza alla sabbia 50 g/m³ - Sand tolerance 50 g/m³ - Compatibilità con acqua potabile DM 174 Drinking water compatibility according to DM 174
Tolleranze secondo UNI ISO 9906 livello 3B - Tolerances according to UNI ISO 9906 grade 3B

PANELLI®

10"

230 SX280

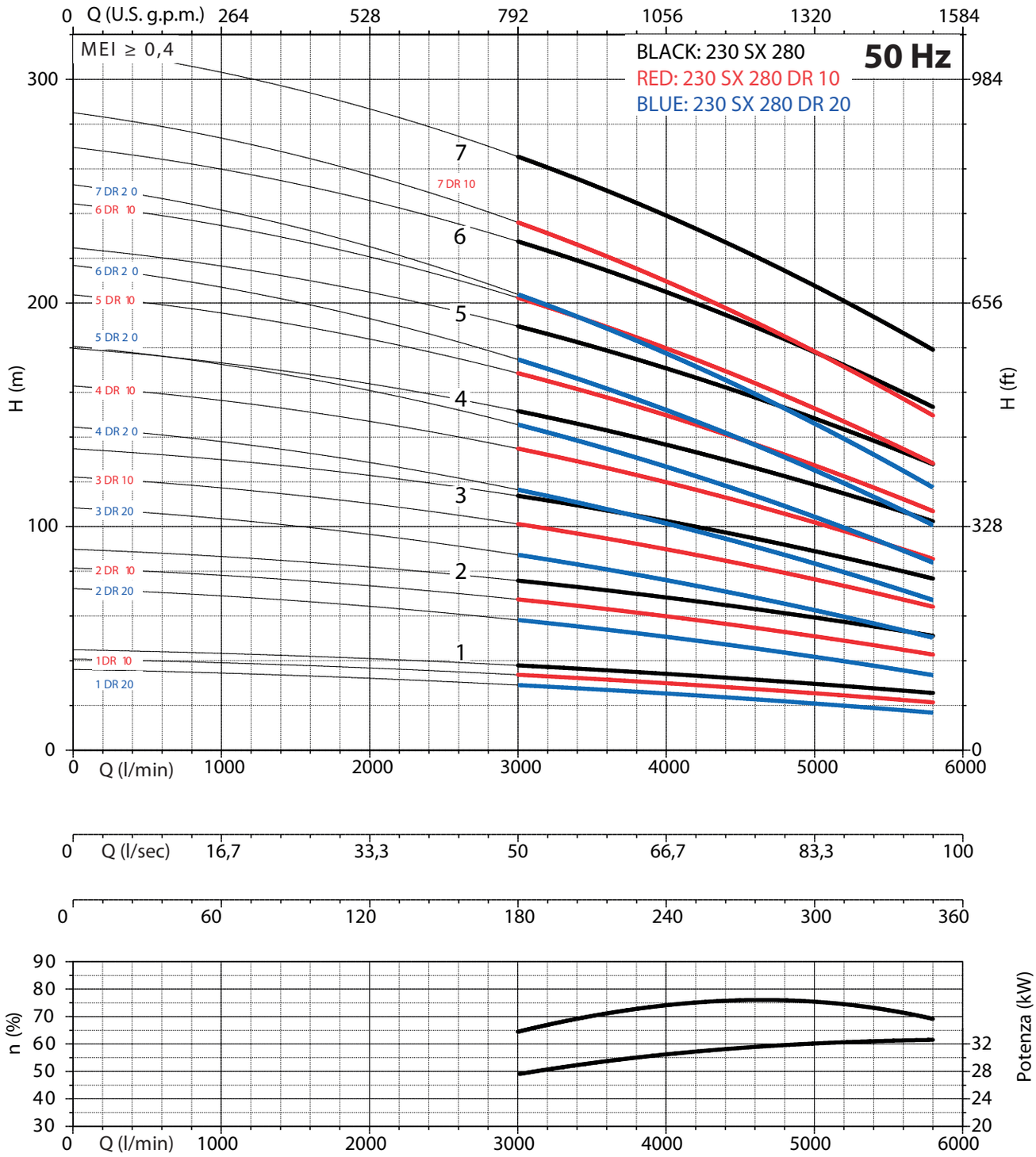

NPSH (m)	25%	50%	75%	100%
230 SX 280	3,4	5	7,8	11,8

acciaio inox microfuso - elevato rendimento - casted stainless steel - high efficiency

12" 270 SX370

PANELLI®

CARATTERISTICHE IDRAULICHE - HYDRAULIC PERFORMANCES

Q= Portata - Capacity - Debit **50 Hz** **n= 2900 min**

Tipo Type	Power kW	Power HP	l/min	0	3000	3500	4000	4500	5000	5500	6000	6500	7000
			l/sec	0	50	58,33	66,67	75	83,33	91,67	100	108,33	116,67
			m³/h	0	180	210	240	270	300	330	360	390	420
270 SX 370/1 DR 35	37	50	H(m)	41	38	37	37	35	33	32	29		
270 SX 370/1 DR 26	44	60		46	45	44	43	42	39	38	36	34	
270 SX 370/1 DR 20	55	75		49	48	47	47	45	44	42	40	38	34
270 SX 370/1 DR 10	55	75		55	52	52	51	50	48	47	44	42	40
270 SX 370/1	66	90		62	56	55	55	53	52	52	50	47	42
270 SX 370/2 DR 35	75	100		82	76	74	73	70	66	63	57		
270 SX 370/2 DR 26	92	125		92	89	88	86	84	78	75	72	68	
270 SX 370/2 DR 20	110	150		98	95	94	93	90	87	84	80	75	68
270 SX 370/2 DR 10	110	150		110	104	103	101	99	96	93	88	84	80
270 SX 370/2	129	175		124	112	110	109	106	104	103	100	93	84

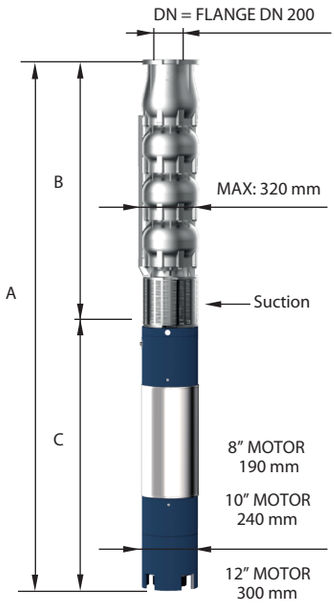

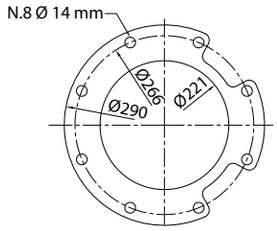

FOR COMMERCIAL TUBE
EXTERNAL DIAMETER: 219,1 mm

DIMENSIONI D'INGOMBRO E PESI - OVERALL DIMENSIONS AND WEIGHTS

Type	A mm Tri V 400	B mm	C mm Tri	M Kg Tri	P Kg
270 SX 370/1 DR 35	1813	770	1043	160	79
270 SX 370/1 DR 26	1893	770	1123	178	79
270 SX 370/1 DR 20	2003	770	1233	200	79
270 SX 370/1 DR 10	2003	770	1233	200	79
270 SX 370/1	2073	770	1303	214	79
270 SX 370/2 DR 35	2383	1000	1383	230	104
270 SX 370/2 DR 26	2583	1000	1583	270	104
270 SX 370/2 DR 20	2733	1000	1733	300	104
270 SX 370/2 DR 10	2504	1000	1504	350	104
270 SX 370/2	2634	1000	1634	385	104

	Max	DR 10	DR 20	DR 26	DR 35
n% = Rendimento della pompa ***n% = Rendement de la pompe*** **n% = Pump efficiency** ***n% = Rendimiento de la bomba***	**81%**	**Max 80,5%**	**Max 80%**	**Max 78,5%**	**Max 77,5%**
kW/st = Assorbimento per stadio ***kW/st = Absorption par étage*** **kW/st = Stage absorption** ***kW/st = Potencia absorbida por etapa***	**Max 64,2**	**Max 55,2**	**Max 49,5**	**Max 44,1**	**Max 36,8**

Tolleranza alla sabbia 50 g/m³ - Sand tolerance 50 g/m³ - Compatibilità con acqua potabile DM 174 Drinking water compatibility according to DM 174
Tolleranze secondo UNI ISO 9906 livello 3B - Tolerances according to UNI ISO 9906 grade 3B

PANELLI®

12" 270 SX370

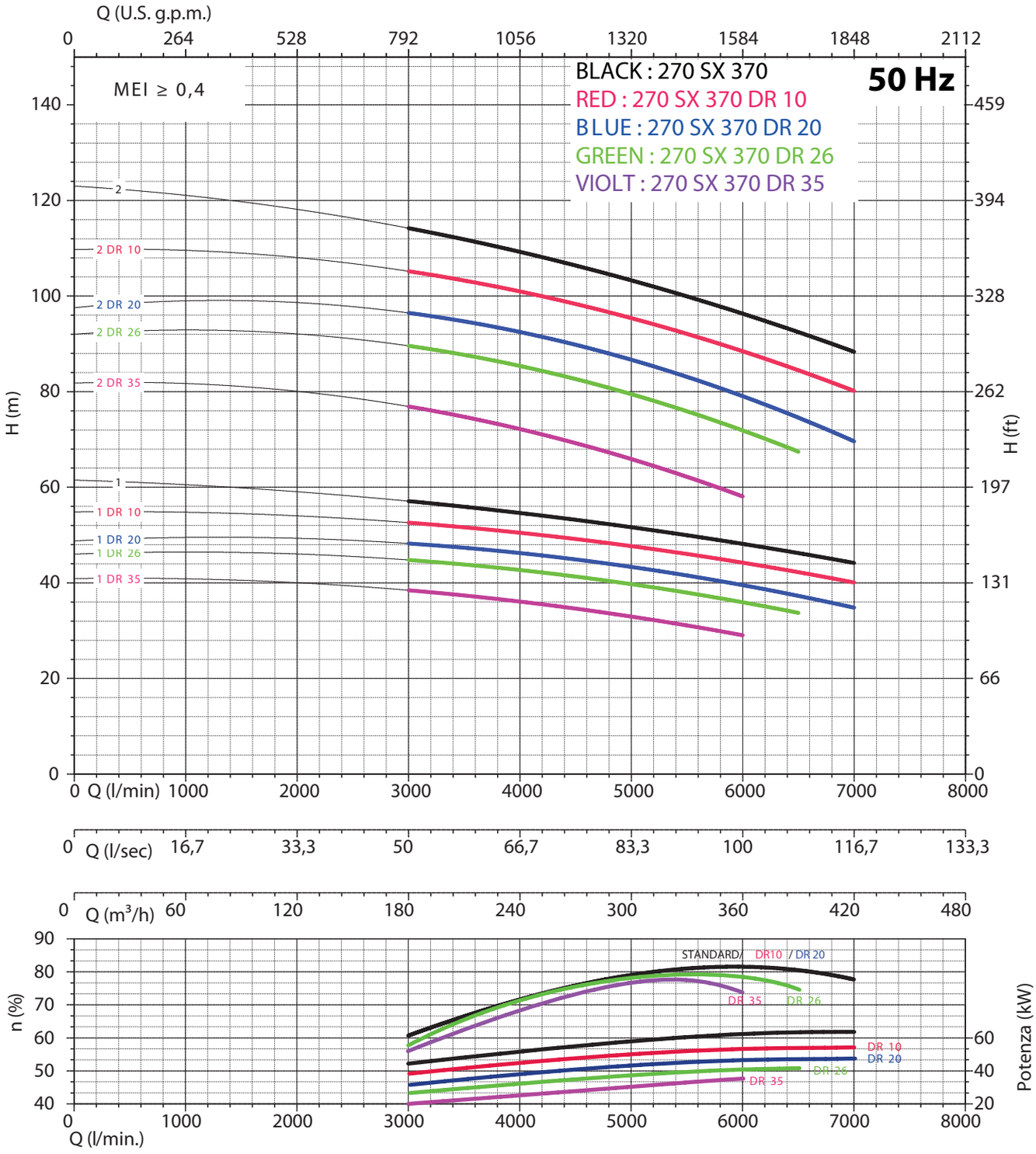

NPSH (m)	25%	50%	75%	100%
270 SX 370	3,4	5	7,8	11,8

acciaio inox microfuso - elevato rendimento - casted stainless steel - high efficiency

12" 270 SX370

PANELLI®

CARATTERISTICHE IDRAULICHE - HYDRAULIC PERFORMANCES

Q= Portata - Capacity - Debit **50 Hz n= 2900 min**

Tipo Type	Power kW	Power HP	l/min	0	3000	3500	4000	4500	5000	5500	6000	6500	7000
			l/sec	0	50	58,33	66,67	75	83,33	91,67	100	108,33	116,67
			m³/h	0	180	210	240	270	300	330	360	390	420
270 SX 370/3 DR 35	110	150	H(m)	123	114	111	110	105	99	95	86		
270 SX 370/3 DR 26	129	175		138	134	132	129	126	117	113	108	102	
270 SX 370/3 DR 20	147	200		147	143	141	140	135	131	126	120	113	102
270 SX 370/3 DR 10	165	225		165	156	155	152	149	144	140	132	126	120
270 SX 370/3	220	300		186	168	165	164	159	156	155	150	140	126
270 SX 370/4 DR 35	147	200		164	152	148	146	140	132	126	114		
270 SX 370/4 DR 26	185	250		184	178	176	172	168	156	150	144	136	
270 SX 370/4 DR 20	220	300		196	190	188	186	180	174	168	160	150	136
270 SX 370/4 DR 10	220	300		220	208	206	202	198	192	186	176	168	160
270 SX 370/4	250	340		248	224	220	218	212	208	206	200	186	168
270 SX 370/5 DR 35	185	250		205	190	185	183	175	165	158	143		
270 SX 370/5 DR 26	220	300		230	223	220	215	210	195	188	180	170	
270 SX 370/5 DR 20	250	340		245	238	235	233	225	218	210	200	188	170
270 SX 370/5 DR 10	300	408		275	260	258	253	248	240	233	220	210	200
270 SX 370/5	350	475		310	280	275	273	265	260	258	250	233	210

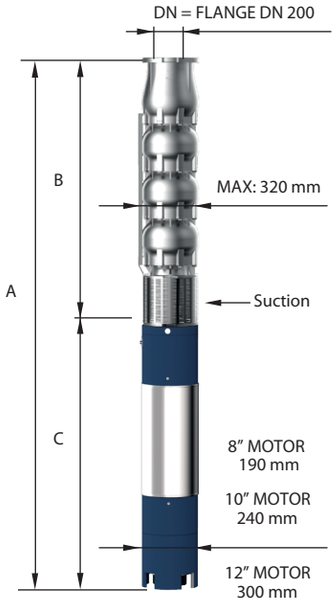

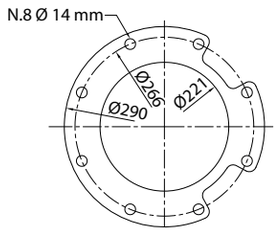

FOR COMMERCIAL TUBE
EXTERNAL DIAMETER: 219,1 mm

DIMENSIONI D'INGOMBRO E PESI - OVERALL DIMENSIONS AND WEIGHTS

Type	A mm Tri V 400	B mm	C mm Tri	M Kg Tri	P Kg
270 SX 370/3 DR 35	2963	1230	1733	300	129
270 SX 370/3 DR 26	2864	1230	1634	385	129
270 SX 370/3 DR 20	2964	1230	1734	415	129
270 SX 370/3 DR 10	3084	1230	1854	444	129
270 SX 370/3	3123	1230	1893	663	129
270 SX 370/4 DR 35	3194	1460	1734	415	154
270 SX 370/4 DR 26	3444	1460	1984	480	154
270 SX 370/4 DR 20	0	1460	0	0	154
270 SX 370/4 DR 10	0	1460	0	0	154
270 SX 370/4	0	1460	0	0	154
270 SX 370/5 DR 35	3674	1690	1984	480	179
270 SX 370/5 DR 26	0	1690	0	0	179
270 SX 370/5 DR 20	0	1690	0	0	179
270 SX 370/5 DR 10	0	1690	0	0	179
270 SX 370/5	0	1690	0	0	179

n% = Rendimento della pompa
n% = Rendement de la pompe
n% = Pump efficiency
n% = Rendimiento de la bomba

Max	DR 10	DR 20	DR 26	DR 35
81%	Max 80,5%	Max 80%	Max 78,5%	Max 77,5%

kW/st = Assorbimento per stadio
kW/st = Absorption par étage
kW/st = Stage absorption
kW/st = Potencia absorbida por etapa

Max	DR 10	DR 20	DR 26	DR 35
64,2	Max 55,2	Max 49,5	Max 44,1	Max 36,8

Tolleranza alla sabbia 50 g/m³ - Sand tolerance 50 g/m³ - Compatibilità con acqua potabile DM 174 Drinking water compatibility according to DM 174
Tolleranze secondo UNI ISO 9906 livello 3B - Tolerances according to UNI ISO 9906 grade 3B

PANELLI®

12" 270 SX370

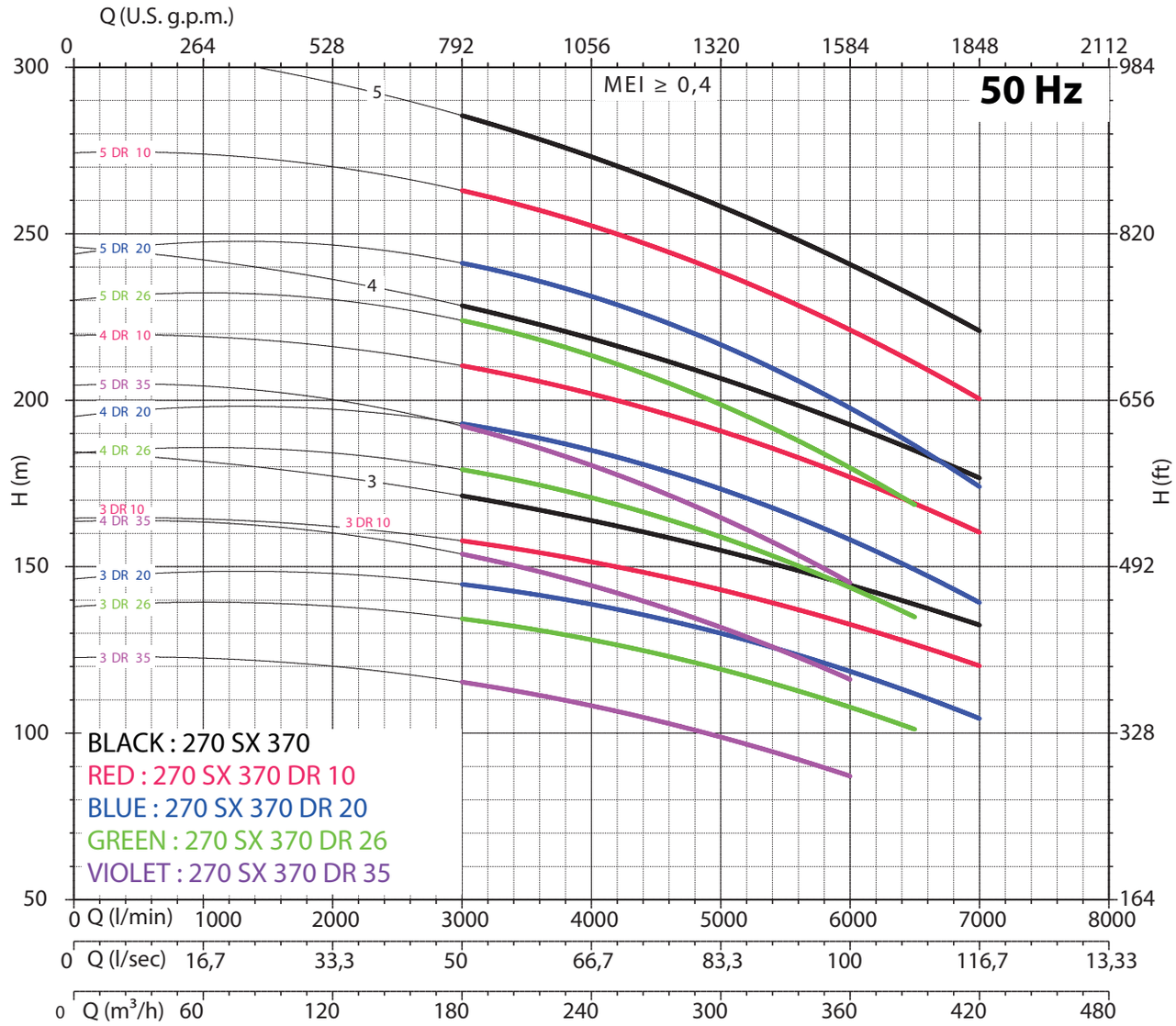

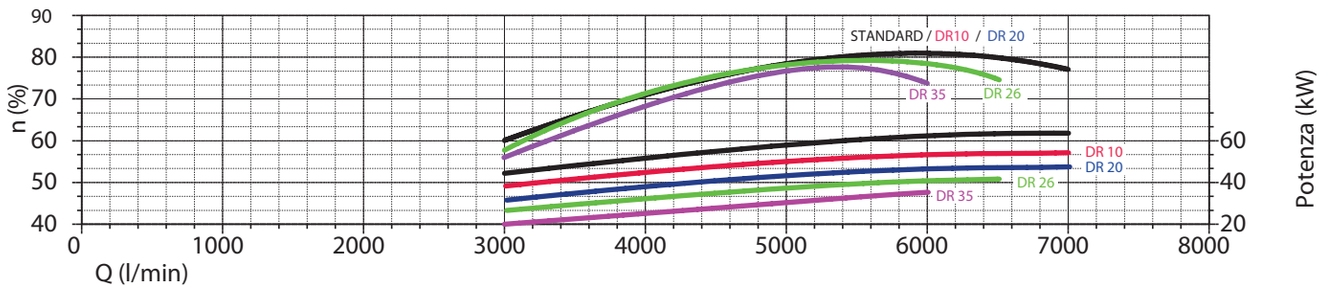

NPSH (m)	25%	50%	75%	100%
270 SX 370	3,4	5	7,8	11,8

12" 270 SX440

PANELLI®

CARATTERISTICHE IDRAULICHE - HYDRAULIC PERFORMANCES

Q= Portata - Capacity - Debit **50 Hz n= 2900 min**

Tipo Type	Power kW	Power HP	l/min	0	4000	4500	5000	5500	6000	6500	7000	7500	8000	8500	9000
			l/sec	0	66,67	75	83,33	91,67	100	108,33	116,67	25	133,33	141,67	150
			m³/h	0	240	270	300	330	360	390	420	450	480	510	540
270 SX 440/1 DR 30	37	50	H(m)	43	39	38	36	34	32	30	27	24			
270 SX 440/1 DR 20	44	60		47	44	43	41	39	37	35	33	30	26	22	
270 SX 440/1 DR 10	55	75		53	50	48	46	44	42	40	38	36	32	28	
270 SX 440/1	66	90		58	54	52	50	48	46	44	42	40	37	31	27
270 SX 440 A/1	66	90		61	57	54	53	52	50	48	46	44	41	39	32
270 SX 440/2 DR 30	75	100		86	78	76	72	68	64	60	54	48			
270 SX 440/2 DR 20	92	125		94	88	86	82	77	73	69	65	59	52	44	
270 SX 440/2 DR 10	110	150		106	100	96	92	88	84	80	76	71	64	56	
270 SX 440/2	129	175		116	108	104	100	96	92	88	84	80	73	62	54
270 SX 440 A/2	147	200		122	114	108	106	104	100	96	92	89	82	78	64

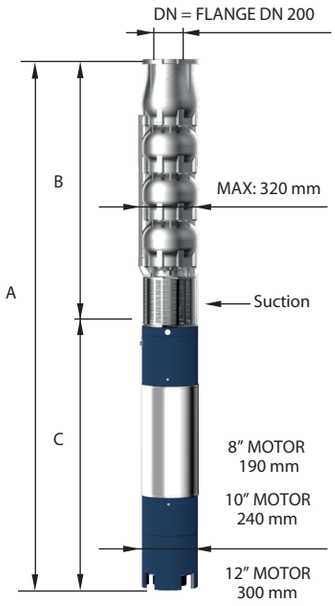

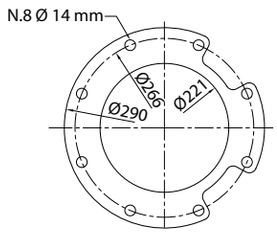

FOR COMMERCIAL TUBE
EXTERNAL DIAMETER: 219,1 mm

DIMENSIONI D'INGOMBRO E PESI - OVERALL DIMENSIONS AND WEIGHTS

Type	A mm Tri V 400	B mm	C mm Tri	M Kg Tri	P Kg
270 SX 440/1 DR 30	1813	770	1043	160	79
270 SX 440/1 DR 20	1893	770	1123	178	79
270 SX 440/1 DR 10	2003	770	1233	200	79
270 SX 440/1	2073	770	1303	214	79
270 SX 440 A/1	2073	770	1303	214	79
270 SX 440/2 DR 30	2383	1000	1383	230	104
270 SX 440/2 DR 20	2583	1000	1583	270	104
270 SX 440/2 DR 10	2733	1000	1733	300	104
270 SX 440/2	2634	1000	1634	385	104
270 SX 440 A/2	2734	1000	1734	415	104

n% = Rendimento della pompa
n% = Rendement de la pompe
n% = Pump efficiency
n% = Rendimiento de la bomba

440 A	440	440 DR 10	440 DR 20	440 DR 30
Max 82,5%	**Max 81,6%**	**Max 82,7%**	**Max 81,8%**	**Max 81,2%**

kW/st = Assorbimento per stadio
kW/st = Absorption par étage
kW/st = Stage absorption
kW/st = Potencia absorbida por etapa

440 A	440	440 DR 10	440 DR 20	440 DR 30
Max 67	**Max 60,4**	**Max 53**	**Max 45,6**	**Max 37**

Tolleranza alla sabbia 50 g/m³ - Sand tolerance 50 g/m³ - Compatibilità con acqua potabile DM 174 Drinking water compatibility according to DM 174
Tolleranze secondo UNI ISO 9906 livello 3B - Tolerances according to UNI ISO 9906 grade 3B

PANELLI®

12" 270 SX440

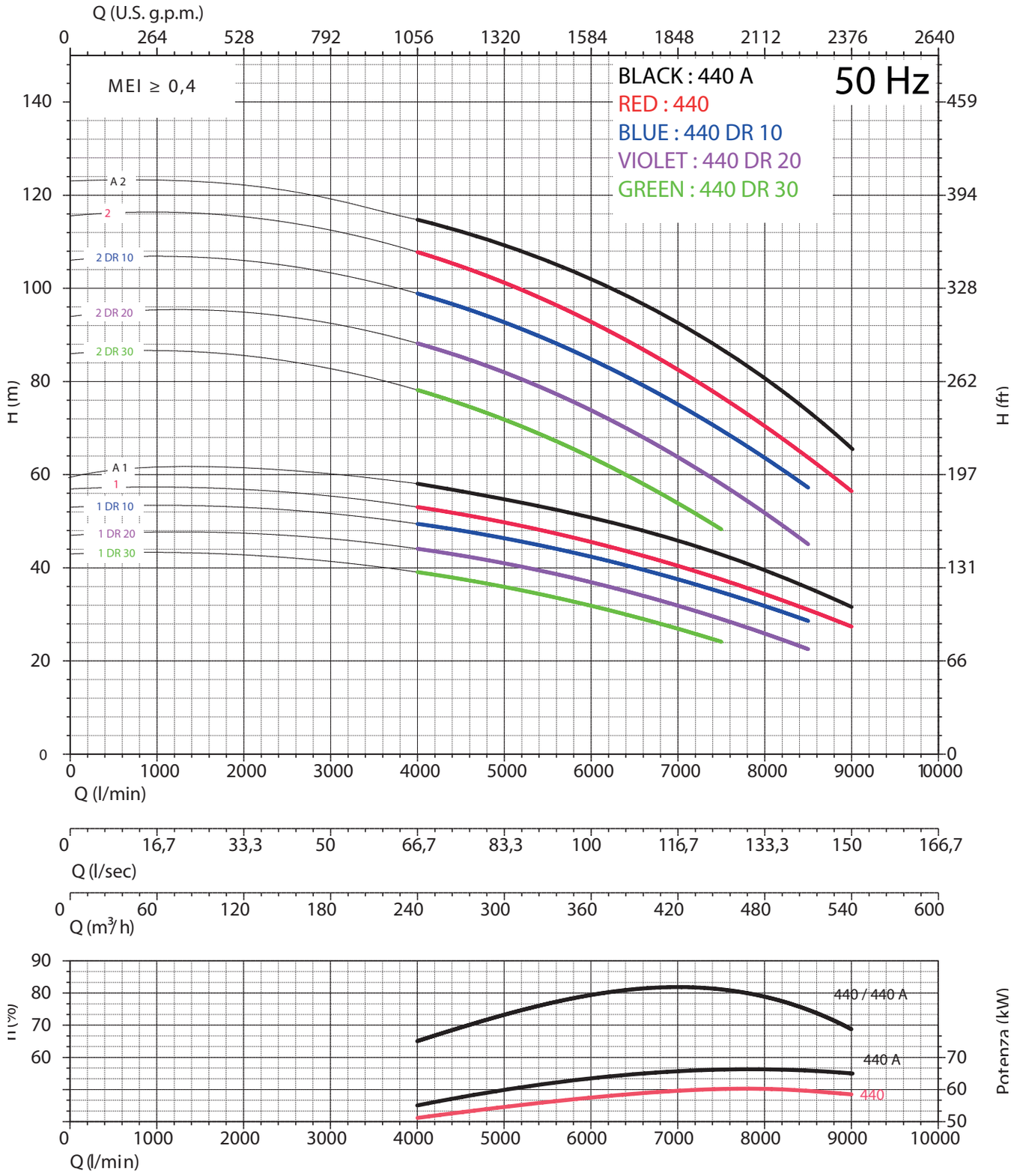

NPSH (m)	25%	50%	75%	100%
270 SX 440	3,4	5	7,8	11,8

12" 270 SX440

PANELLI®

CARATTERISTICHE IDRAULICHE - HYDRAULIC PERFORMANCES

Q= Portata - Capacity - Debit **50 Hz n= 2900 min**

Tipo Type	Power kW	Power HP	l/min	0	4000	4500	5000	5500	6000	6500	7000	7500	8000	8500	9000
			l/sec	0	66,67	75	83,33	91,67	100	108,33	116,67	25	133,33	141,67	150
			m³/h	0	240	270	300	330	360	390	420	450	480	510	540
270 SX 440/3 DR 30	129	175		129	117	113	108	102	96	89	81	72			
270 SX 440/3 DR 20	147	200		141	132	129	123	116	110	104	98	89	78	66	
270 SX 440/3 DR 10	165	225		159	150	144	138	132	126	120	114	107	96	84	
270 SX 440/3	185	250		174	162	156	150	144	138	132	126	120	110	93	81
270 SX 440 A/3	220	300		183	171	162	159	156	150	144	138	134	123	117	96
270 SX 440/4 DR 30	165	225		172	156	150	144	136	128	118	108	96			
270 SX 440/4 DR 20	185	250		188	176	172	164	154	146	138	130	118	104	88	
270 SX 440/4 DR 10	220	300	H(m)	212	200	192	184	176	168	160	152	142	128	112	
270 SX 440/4	250	340		232	216	208	200	192	184	176	168	160	146	124	108
270 SX 440 A/4	300	408		244	228	216	212	208	200	192	184	178	164	156	128
270 SX 440/5 DR 30	220	300		215	195	188	180	170	160	148	135	120			
270 SX 440/5 DR 20	250	340		235	220	215	205	193	183	173	163	148	130	110	
270 SX 440/5 DR 10	300	408		265	250	240	230	220	210	200	190	178	160	140	
270 SX 440/5	300	408		290	270	260	250	240	230	220	210	200	183	155	135
270 SX 440 A/5	350	475		305	285	270	265	260	250	240	230	223	205	195	160

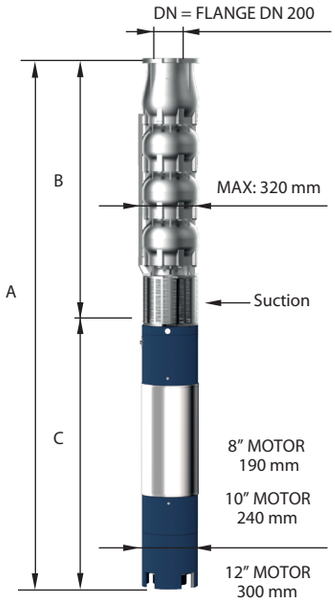

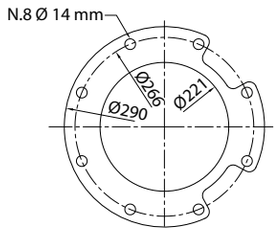

FOR COMMERCIAL TUBE
EXTERNAL DIAMETER: 219,1 mm

DIMENSIONI D'INGOMBRO E PESI - OVERALL DIMENSIONS AND WEIGHTS

Type	A mm Tri V 400	B mm	C mm Tri	M Kg Tri	P Kg
270 SX 440/3 DR 30	2864	1230	1634	385	129
270 SX 440/3 DR 20	2964	1230	1734	415	129
270 SX 440/3 DR 10	3084	1230	1854	444	129
270 SX 440/3	3214	1230	1984	480	129
270 SX 440 A/3	0	1230	0	0	129
270 SX 440/4 DR 30	3314	1460	1854	444	154
270 SX 440/4 DR 20	3444	1460	1984	480	154
270 SX 440/4 DR 10	0	1460	0	0	154
270 SX 440/4	0	1460	0	0	154
270 SX 440 A/4	0	1460	0	0	154
270 SX 440/5 DR 30	0	1690	0	0	179
270 SX 440/5 DR 20	0	1690	0	0	179
270 SX 440/5 DR 10	0	1690	0	0	179
270 SX 440/5	0	1690	0	0	179
270 SX 440 A/5	0	1690	0	0	179

n% = Rendimento della pompa
n% = Rendement de la pompe
n% = Pump efficiency
n% = Rendimiento de la bomba

440 A	440	440 DR 10	440 DR 20	440 DR 30
Max 82,5%	**Max 81,6%**	**Max 82,7%**	**Max 81,8%**	**Max 81,2%**

kW/st = Assorbimento per stadio
kW/st = Absorption par étage
kW/st = Stage absorption
kW/st = Potencia absorbida por etapa

440 A	440	440 DR 10	440 DR 20	440 DR 30
Max 67	**Max 60,4**	**Max 53**	**Max 45,6**	**Max 37**

Tolleranza alla sabbia 50 g/m³ - Sand tolerance 50 g/m³ - Compatibilità con acqua potabile DM 174 Drinking water compatibility according to DM 174
Tolleranze secondo UNI ISO 9906 livello 3B - Tolerances according to UNI ISO 9906 grade 3B

PANELLI® 12" 270 SX440

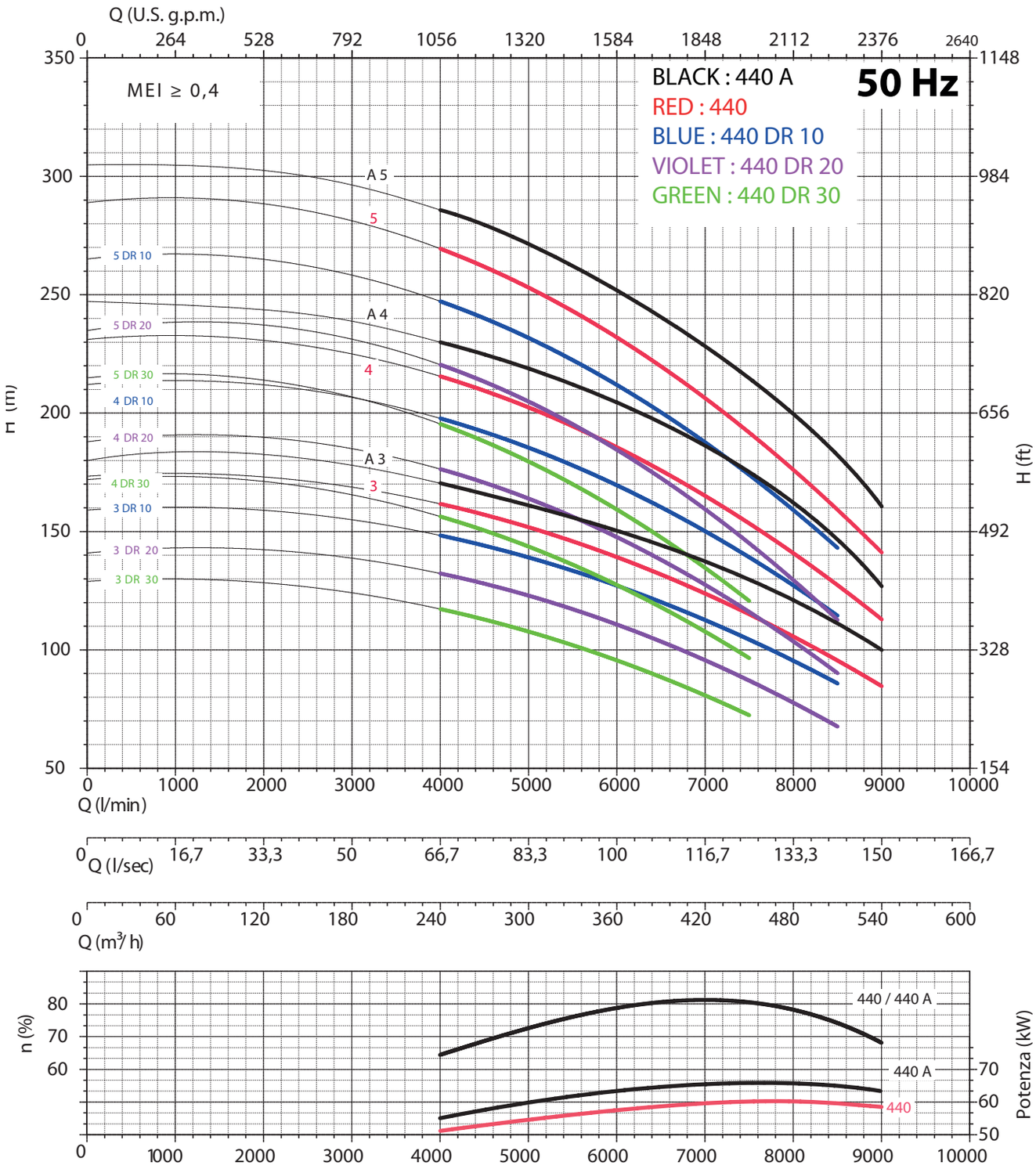

NPSH (m)	25%	50%	75%	100%
270 SX 440	3,4	5	7,8	11,8

PANELLI®

italian excellence since 1906

10" 230 SX | 50Hz

POMPA SOMMERSA SEMIASSIALE - INOX
SEMIAXIAL SUBMERSIBLE PUMP - INOX

Casted

POMPA 10" ACCOPPIATA A MOTORE 6"
10'' PUMP COUPLING WITH 6'' MOTORS
CONNECTION FLANGE

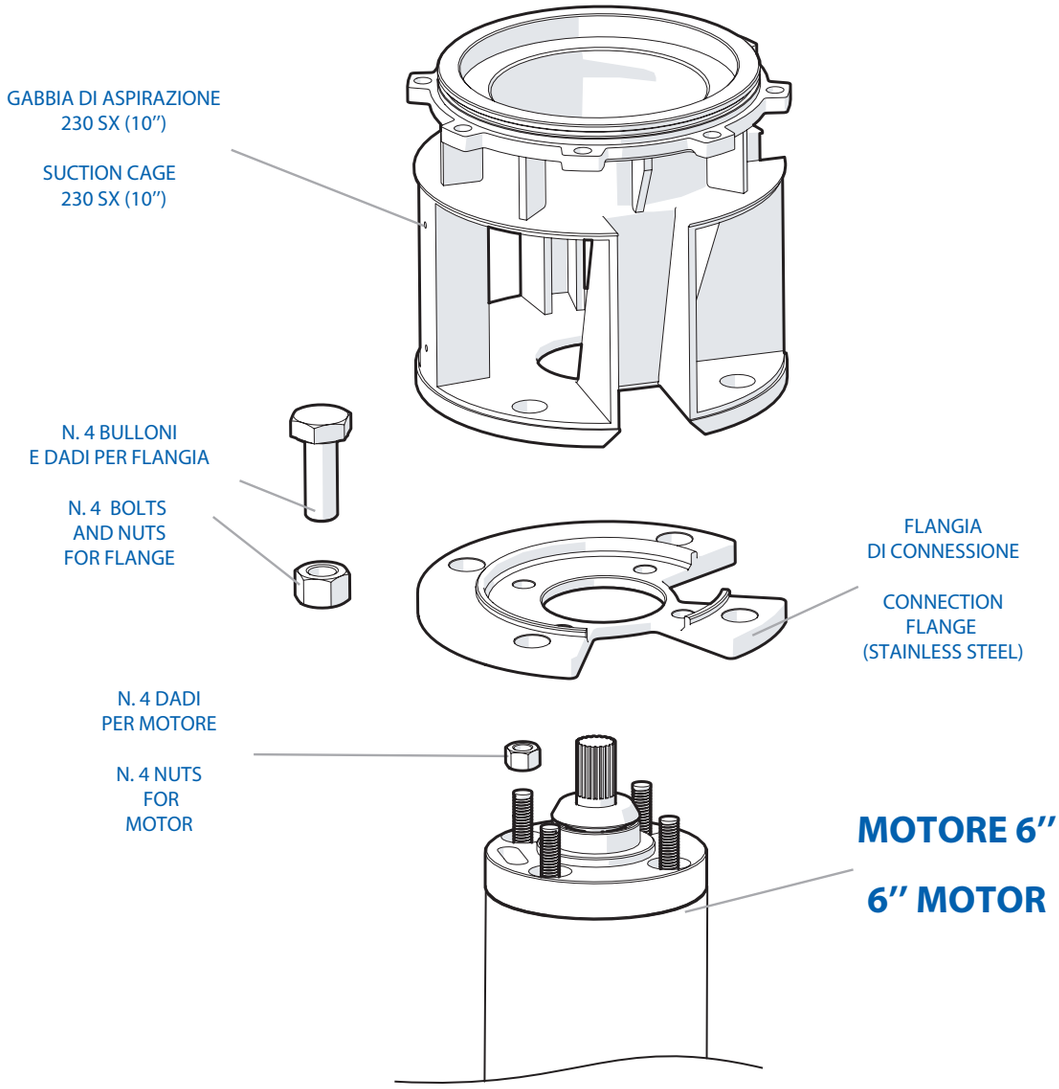

PANELLI®

italian excellence since 1906

6" 8" 10" 12"

140 SX
180 SX
230 SX
270 SX

50Hz

POMPA SOMMERSA SEMIASSIALE INOX
SEMIAXIAL SUBMERSIBLE PUMP - INOX

Casted

RICAMBI
TABELLE MATERIALI

SPARE PARTS
MATERIAL CHARTS

6" 8" 10" 12"

140 - 180 - 230 - 270 SX

PANELLI®

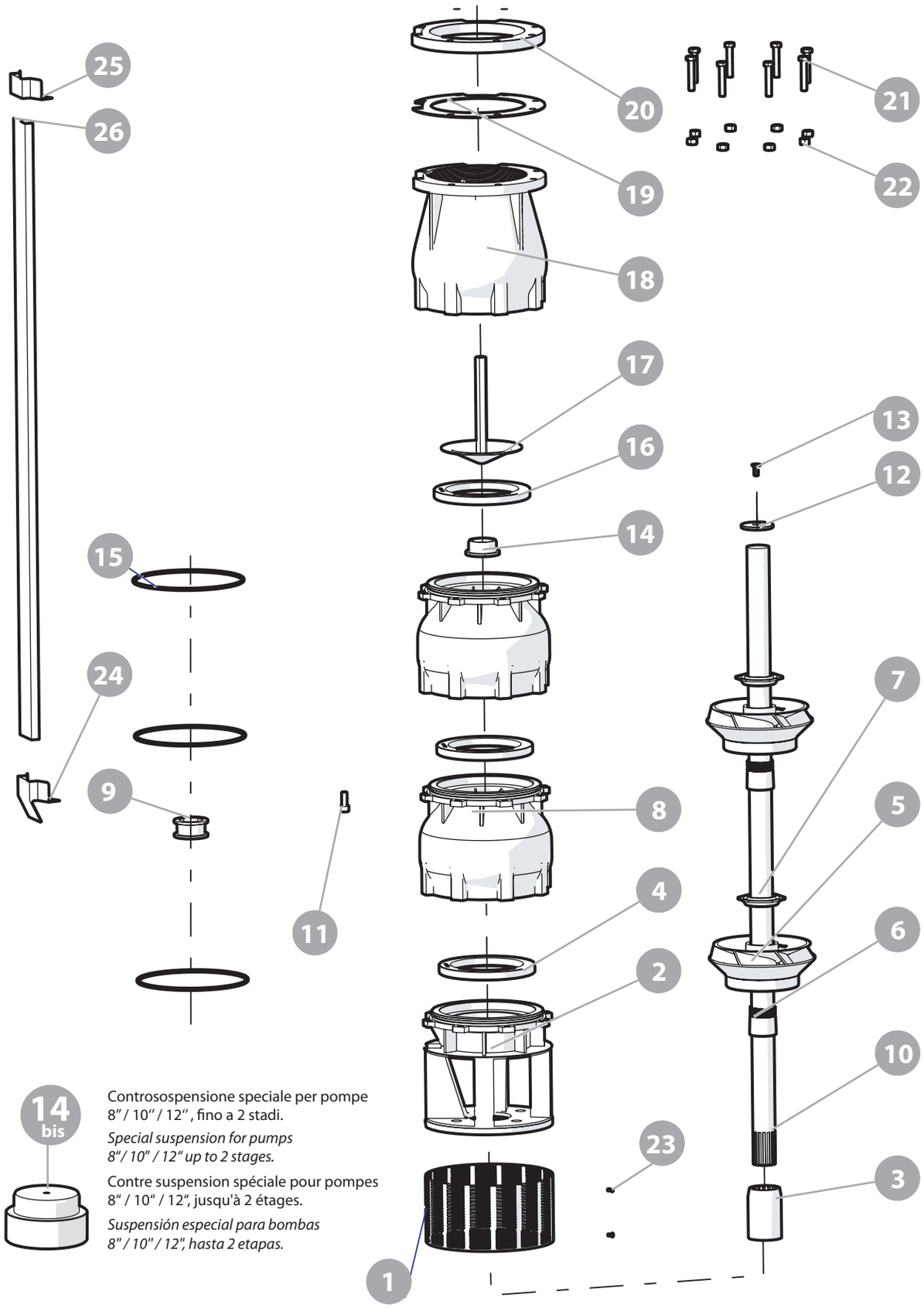

Controsospensione speciale per pompe 8" / 10" / 12", fino a 2 stadi.

Special suspension for pumps 8"/ 10" / 12" up to 2 stages.

Contre suspension spéciale pour pompes 8" / 10" / 12", jusqu'à 2 étages.

Suspensión especial para bombas 8" / 10" / 12", hasta 2 etapas.

PANELLI®

6" 8" 10" 12"

140 - 180 - 230 - 270 SX

140 - 180 - 230 - 270 SX

N. CODE	DESCRIZIONE (italiano)	MATERIALE (italiano)	DESCRIZIONE (english)	MATERIAL (english)
1	SUCCHERUOLA	ACCIAIO INOX AISI 304	SUCTION STRAINER	AISI 304
2	GABBIA DI ASPIRAZIONE	ACCIAIO INOX AISI 304	SUCTION CAGE	AISI 304
3	GIUNTO	ACCIAIO INOX AISI 304	JOINT	AISI 304
4	ANELLO USURA	GOMMA	USURY RING	NBR
5	GIRANTE	ACCIAIO INOX AISI 304	IMPELLER	AISI 304
6	CONO	ACCIAIO INOX AISI 304	CONE	AISI 304
7	GHIERA	ACCIAIO INOX AISI 304	HEXAGONAL RING	AISI 304
8	DIFFUSORE	ACCIAIO INOX AISI 304	DIFFUSEUR	AISI 304
9	BRONZINA	GOMMA	BEARING BUSH	NBR
10	ALBERO POMPA	ACCIAIO INOX AISI 304	PUMP SHAFT	AISI 304
11	N. 8 VITI PER DIFFUSORE	ACCIAIO INOX AISI 304	N. 8 SCREWS FOR DIFFUSEUR	AISI 304
12	DISCO ACCIAIO	ACCIAIO INOX AISI 304	RING	AISI 304
13	VITE DISCO ACCIAIO	ACCIAIO INOX AISI 304	SCREW FOR DISK	AISI 304
14	CONTROSOSPENSIONE	PTFE + 25 CARBONE	COUNTERTHRUST	PTFE + 25 CARBON
15	O-RING	GOMMA	O-RING	NBR
16	GUARNIZIONE FARFALLA	GOMMA	GASKET VALVE	NBR
17	FARFALLA	ACCIAIO INOX AISI 304	CAP VALVE	AISI 304
18	CORPO VALVOLA	ACCIAIO INOX AISI 304	BODY VALVE	AISI 304
19	GUARNIZIONE CONTROFLANGIA	GOMMA	SEAL COUNTERFLANGE	NBR
20	CONTROFLANGIA	ACCIAIO INOX AISI 304	COUNTERFLANGE	AISI 304
21	N. 8 VITI PER CONTROFLANGIA	ACCIAIO INOX AISI 304	N. 8 SCREWS FOR COUNTERFLANGE	AISI 304
22	N. 8 DADI PER CONTROFLANFIA	ACCIAIO INOX AISI 304	N. 8 NUTS FOR COUNTERFLANGE	AISI 304
23	N. 2 VITI PER SUCCHERUOLA	ACCIAIO INOX AISI 304	N. 2 SCREWS FOR SUCTION STRAINER	AISI 304
24	STAFFETTA INFERIORE	ACCIAIO INOX AISI 304	LOWER FLANGE	AISI 304
25	STAFFETTA SUPERIORE	ACCIAIO INOX AISI 304	UPPER FLANGE	AISI 304
26	COPRICAVO	ACCIAIO INOX AISI 304	COVER CABLE	AISI 304

N. CODE	DESCRIPTION (Français)	MATÉRIEL (Français)	DESCRIPCIÓN (español)	MATERIAL (español)
1	CREPINE	ACIER INOXYDABLE AISI 304	REJILLA	ACERO INOXYDABLE AISI 304
2	CAGE D'ASPIRATION	ACIER INOXYDABLE AISI 304	CUERPO DE ASPIRACION	ACERO INOXYDABLE AISI 304
3	JOINT	ACIER INOXYDABLE AISI 304	ACOPLAMIENTO	ACERO INOXYDABLE AISI 304
4	BAGUE D'USURE	CAOUTCHOUC	ANILLO DE DESGASTE	GOMA
5	ROUE	ACIER INOXYDABLE AISI 304	IMPULSOR	ACERO INOXYDABLE AISI 304
6	CONE	ACIER INOXYDABLE AISI 304	CONO	ACERO INOXYDABLE AISI 304
7	BAGUE	ACIER INOXYDABLE AISI 304	ANILLO HEXAGONAL	ACERO INOXYDABLE AISI 304
8	DIFFUSEUR	ACIER INOXYDABLE AISI 304	DIFUSOR	ACERO INOXYDABLE AISI 304
9	COUSSINET	CAOUTCHOUC	COJINETE	GOMA
10	ABRE POMPE	ACIER INOXYDABLE AISI 304	EJE DE BOMBA	ACERO INOXYDABLE AISI 304
11	N. 8 VIS POUR DIFFUSEUR	ACIER INOXYDABLE AISI 304	N. 8 TORNILLOS DIFUSOR	ACERO INOXYDABLE AISI 304
12	RING	ACIER INOXYDABLE AISI 304	ANILLO EN ACERO	ACERO INOXYDABLE AISI 304
13	VIS RING	ACIER INOXYDABLE AISI 304	TORNILLO POR ANILLO EN ACERO	ACERO INOXYDABLE AISI 304
14	CONTRESUSPENSION	PTFE + 25% GRAPHITE	CONTRA-SUSPENCION	PTFE + 25% GRAPHITE
15	O-RING	CAOUTCHOUC	ANILLO TORICO	GOMA
16	GASKET VALVE	CAOUTCHOUC	JUNTA DE VALVULA	GOMA
17	PLAT	ACIER INOXYDABLE AISI 304	VALVULA	ACERO INOXYDABLE AISI 304
18	CORPS DE VALVE	ACIER INOXYDABLE AISI 304	CUERPO DE IMPULSION	ACERO INOXYDABLE AISI 304
19	JOINT ETANCHEITE CONTREBRIDE	CAOUTCHOUC	JUNTA CONTRE-BRIDA	GOMA
20	CONTREBRIDE	ACIER INOXYDABLE AISI 304	CONTRE-BRIDA	ACERO INOXYDABLE AISI 304
21	N. 8 VIS POUR CONTREBRIDE	ACIER INOXYDABLE AISI 304	N. 8 TORNILLOS CONTRE-BRIDA	ACERO INOXYDABLE AISI 304
22	N. 8 ECROU POUR CONTREBRIDE	ACIER INOXYDABLE AISI 304	N. 8 TUERCAS CONTRE-BRIDA	ACERO INOXYDABLE AISI 304
23	N.2 VIS POUR CREPINE	ACIER INOXYDABLE AISI 304	N. 2 TORNILLOS REJILLA	ACERO INOXYDABLE AISI 304
24	BRIDE INFERIEURE	ACIER INOXYDABLE AISI 304	GRAPA INFERIOR	ACERO INOXYDABLE AISI 304
25	BRIDE SUPERIEURE	ACIER INOXYDABLE AISI 304	GRAPA SUPERIOR	ACERO INOXYDABLE AISI 304
26	PROTECTOR CABLE	ACIER INOXYDABLE AISI 304	PARACABLE	ACERO INOXYDABLE AISI 304

14 BIS

CONTROSOSPENSIONE SPECIALE PER POMPE 8" / 10" / 12", FINO A 2 STADI	PTFE +25 CARBONE
SPECIAL SUSPENSION FOR PUMPS 8" / 10" / 12", UP TO 2 STAGES	*PTFE + 25 CARBON*
CONTRE SUSPENSION SPÉCIALE POUR POMPES 8" / 10" / 12", JUSQU'À 2 ÉTAGES	PTFE + 25% GRAPHITE
SUSPENSIÓN ESPECIAL PARA BOMBAS 8" / 10" / 12", HASTA 2 ETAPAS	*PTFE + 25% GRAPHITE*

6" 8" 10" 12"

140 - 180 - 230 - 270 SX

PANELLI®

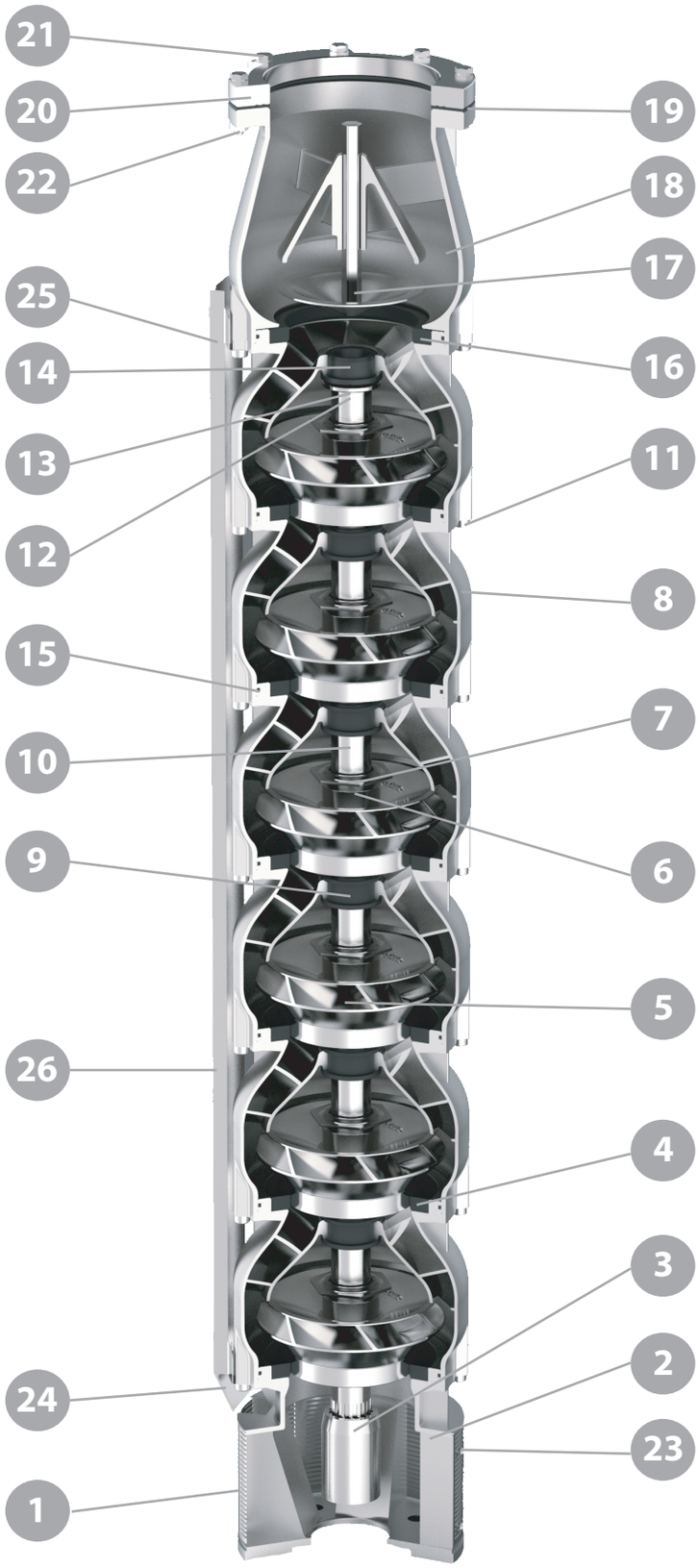

Controsospensione speciale per pompe
8" / 10'' / 12'', fino a 2 stadi.

Special suspension for pumps
8 " / 10 "/ 12", up to 2 stages.

Contre suspension spéciale pour pompes
8" / 10'' / 12'', jusqu'à 2 étages.

Suspensión especial para bombas
8" / 10"/ 12'' , hasta 2 etapas.

PANELLI®

6" 8" 10" 12"

140 - 180 - 230 - 270 SX

140 - 180 - 230 - 270 SX

N. CODE	DESCRIZIONE (italiano)	MATERIALE (italiano)	DESCRIZIONE (english)	MATERIAL (english)
1	SUCCHERUOLA	ACCIAIO INOX AISI 304	SUCTION STRAINER	AISI 304
2	GABBIA DI ASPIRAZIONE	ACCIAIO INOX AISI 304	SUCTION CAGE	AISI 304
3	GIUNTO	ACCIAIO INOX AISI 304	JOINT	AISI 304
4	ANELLO USURA	GOMMA	USURY RING	NBR
5	GIRANTE	ACCIAIO INOX AISI 304	IMPELLER	AISI 304
6	CONO	ACCIAIO INOX AISI 304	CONE	AISI 304
7	GHIERA	ACCIAIO INOX AISI 304	HEXAGONAL RING	AISI 304
8	DIFFUSORE	ACCIAIO INOX AISI 304	DIFFUSEUR	AISI 304
9	BRONZINA	GOMMA	BEARING BUSH	NBR
10	ALBERO POMPA	ACCIAIO INOX AISI 304	PUMP SHAFT	AISI 304
11	N. 8 VITI PER DIFFUSORE	ACCIAIO INOX AISI 304	N. 8 SCREWS FOR DIFFUSEUR	AISI 304
12	DISCO ACCIAIO	ACCIAIO INOX AISI 304	RING	AISI 304
13	VITE DISCO ACCIAIO	ACCIAIO INOX AISI 304	SCREW FOR DISK	AISI 304
14	CONTROSOSPENSIONE	PTFE + 25 CARBONE	COUNTERTHRUST	PTFE + 25 CARBON
15	O-RING	GOMMA	O-RING	NBR
16	GUARNIZIONE FARFALLA	GOMMA	GASKET VALVE	NBR
17	FARFALLA	ACCIAIO INOX AISI 304	CAP VALVE	AISI 304
18	CORPO VALVOLA	ACCIAIO INOX AISI 304	BODY VALVE	AISI 304
19	GUARNIZIONE CONTROFLANGIA	GOMMA	SEAL COUNTERFLANGE	NBR
20	CONTROFLANGIA	ACCIAIO INOX AISI 304	COUNTERFLANGE	AISI 304
21	N. 8 VITI PER CONTROFLANGIA	ACCIAIO INOX AISI 304	N. 8 SCREWS FOR COUNTERFLANGE	AISI 304
22	N. 8 DADI PER CONTROFLANFIA	ACCIAIO INOX AISI 304	N. 8 NUTS FOR COUNTERFLANGE	AISI 304
23	N. 2 VITI PER SUCCHERUOLA	ACCIAIO INOX AISI 304	N. 2 SCREWS FOR SUCTION STRAINER	AISI 304
24	STAFFETTA INFERIORE	ACCIAIO INOX AISI 304	LOWER FLANGE	AISI 304
25	STAFFETTA SUPERIORE	ACCIAIO INOX AISI 304	UPPER FLANGE	AISI 304
26	COPRICAVO	ACCIAIO INOX AISI 304	COVER CABLE	AISI 304

N. CODE	DESCRIPTION (Français)	MATÉRIEL (Français)	DESCRIPCIÓN (español)	MATERIAL (español)
1	CREPINE	ACIER INOXYDABLE AISI 304	REJILLA	ACERO INOXYDABLE AISI 304
2	CAGE D'ASPIRATION	ACIER INOXYDABLE AISI 304	CUERPO DE ASPIRACION	ACERO INOXYDABLE AISI 304
3	JOINT	ACIER INOXYDABLE AISI 304	ACOPLAMIENTO	ACERO INOXYDABLE AISI 304
4	BAGUE D'USURE	CAOUTCHOUC	ANILLO DE DESGASTE	GOMA
5	ROUE	ACIER INOXYDABLE AISI 304	IMPULSOR	ACERO INOXYDABLE AISI 304
6	CONE	ACIER INOXYDABLE AISI 304	CONO	ACERO INOXYDABLE AISI 304
7	BAGUE	ACIER INOXYDABLE AISI 304	ANILLO HEXAGONAL	ACERO INOXYDABLE AISI 304
8	DIFFUSEUR	ACIER INOXYDABLE AISI 304	DIFUSOR	ACERO INOXYDABLE AISI 304
9	COUSSINET	CAOUTCHOUC	COJINETE	GOMA
10	ABRE POMPE	ACIER INOXYDABLE AISI 304	EJE DE BOMBA	ACERO INOXYDABLE AISI 304
11	N. 8 VIS POUR DIFFUSEUR	ACIER INOXYDABLE AISI 304	N. 8 TORNILLOS DIFUSOR	ACERO INOXYDABLE AISI 304
12	RING	ACIER INOXYDABLE AISI 304	ANILLO EN ACERO	ACERO INOXYDABLE AISI 304
13	VIS RING	ACIER INOXYDABLE AISI 304	TORNILLO POR ANILLO EN ACERO	ACERO INOXYDABLE AISI 304
14	CONTRESUSPENSION	PTFE + 25% GRAPHITE	CONTRA-SUSPENCION	PTFE + 25% GRAPHITE
15	O-RING	CAOUTCHOUC	ANILLO TORICO	GOMA
16	GASKET VALVE	CAOUTCHOUC	JUNTA DE VALVULA	GOMA
17	PLAT	ACIER INOXYDABLE AISI 304	VALVULA	ACERO INOXYDABLE AISI 304
18	CORPS DE VALVE	ACIER INOXYDABLE AISI 304	CUERPO DE IMPULSION	ACERO INOXYDABLE AISI 304
19	JOINT ETANCHEITE CONTREBRIDE	CAOUTCHOUC	JUNTA CONTRE-BRIDA	GOMA
20	CONTREBRIDE	ACIER INOXYDABLE AISI 304	CONTRE-BRIDA	ACERO INOXYDABLE AISI 304
21	N. 8 VIS POUR CONTREBRIDE	ACIER INOXYDABLE AISI 304	N. 8 TORNILLOS CONTRE-BRIDA	ACERO INOXYDABLE AISI 304
22	N. 8 ECROU POUR CONTREBRIDE	ACIER INOXYDABLE AISI 304	N. 8 TUERCAS CONTRE-BRIDA	ACERO INOXYDABLE AISI 304
23	N.2 VIS POUR CREPINE	ACIER INOXYDABLE AISI 304	N. 2 TORNILLOS REJILLA	ACERO INOXYDABLE AISI 304
24	BRIDE INFERIEURE	ACIER INOXYDABLE AISI 304	GRAPA INFERIOR	ACERO INOXYDABLE AISI 304
25	BRIDE SUPERIEURE	ACIER INOXYDABLE AISI 304	GRAPA SUPERIOR	ACERO INOXYDABLE AISI 304
26	PROTECTOR CABLE	ACIER INOXYDABLE AISI 304	PARACABLE	ACERO INOXYDABLE AISI 304

14 BIS

CONTROSOSPENSIONE SPECIALE PER POMPE 8" / 10" / 12", FINO A 2 STADI	PTFE +25 CARBONE
SPECIAL SUSPENSION FOR PUMPS 8" / 10" / 12", UP TO 2 STAGES	*PTFE + 25 CARBON*
CONTRE SUSPENSION SPÉCIALE POUR POMPES 8" / 10" / 12", JUSQU'À 2 ÉTAGES	PTFE + 25% GRAPHITE
SUSPENSIÓN ESPECIAL PARA BOMBAS 8" / 10" / 12", HASTA 2 ETAPAS	*PTFE + 25% GRAPHITE*

PANELLI®

italian excellence since 1906

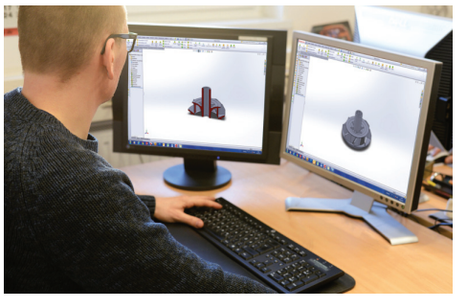

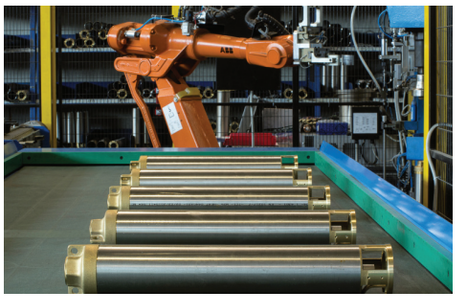

UNIONCAMERE
CAMERE DI COMMERCIO D'ITALIA

Camera di Commercio Alessandria

Certificato di iscrizione nel

Registro delle Imprese Storiche

rilasciato all'impresa

Panelli Srl

costituita nel 1906

Il Presidente di Unioncamere Ferruccio Dardanello

Il Presidente della Camera di Commercio di Alessandria Gian Carlo Subacchi

Alessandria, 2 dicembre 2012

Panelli s.r.l.
Sede legale: 37047 San Bonifacio (VR) ITALY - Via E. Fermi, 7
Unità produttiva: 15122 (Alessandria) ITALY
Via Rana , 63/65 – Z.I D5 - Spinetta Marengo
Phone : + 39 0131 619506 - Fax : + 39 0131 619017
Email : info@panellipumps.it - www.panellipumps.it
Società soggetta a direzione e coordinamento di
PEDROLLO GROUP s.r.l.