acciaio inox microfuso - elevato rendimento - casted stainless steel - high efficiency

PANELLI®

italian excellence since 1906

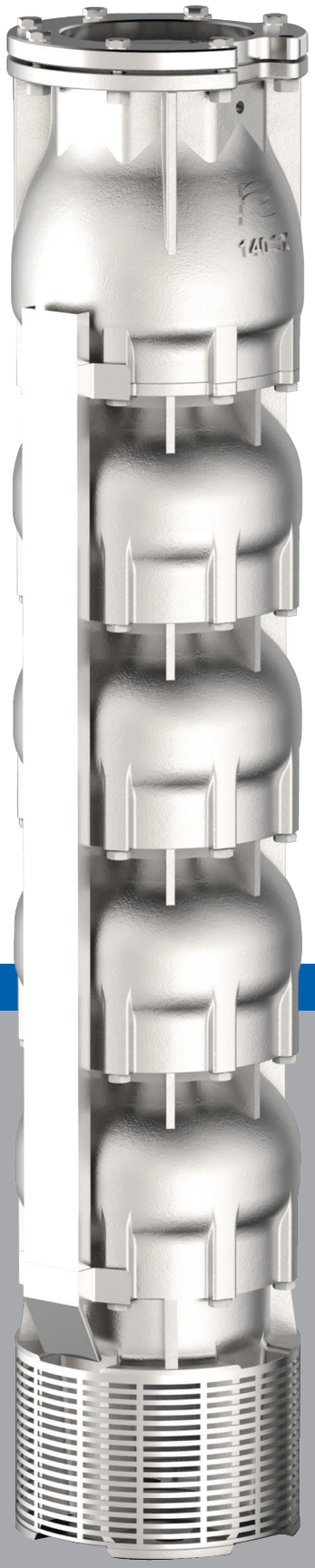

6" 8" 10" 12"

140 SX - 180 SX
230 SX - 270 SX

60Hz

POMPA SOMMERSA SEMIASSIALE INOX

SEMIAXIAL SUBMERSIBLE PUMP - INOX

Casted

MADE IN ITALY

6" 8" 10" 12"

140 SX
180 SX
230 SX
270 SX

60Hz

POMPA SOMMERSA SEMIASSIALE INOX
SEMIAXIAL SUBMERSIBLE PUMP - INOX

Casted

Pompa semiassiale in acciaio inossidabile microfuso

Casted stainless steel semiaxial pump

Pompe semiaxiale en acier inoxydable - fundicion

Bomba semiaxial en acero inoxidable microfundido

Disponbile in: AISI 304 - AISI 316 - Duplex

Available in: AISI 304 - AISI 316 - Duplex

Disponible en: AISI 304 - AISI 316 - Duplex

Disponibilidad en: AISI 304 - AISI 316 - Duplex

PANELLI®

italian excellence since 1906

Tolleranza alla sabbia 50 g/m^3 - sand tolerance 50 g/m^3
Tolleranze secondo UNI ISO 9906 livello 3B - Tolerances according to UNI ISO 9906 grade 3B

acciaio inox microfuso - elevato rendimento - casted stainless steel - high efficiency

PANELLI®

italian excellence since 1906

6" 8" 10" 12"

140 SX
180 SX
230 SX
270 SX

60Hz

POMPA SOMMERSA SEMIASSIALE INOX
SEMIAXIAL SUBMERSIBLE PUMP - INOX

Casted

Girante e diffusore in acciaio inossidabile AISI 304 microfuso

Casted stainless steel impeller and diffuser AISI 304

Roue et diffuseur en acier inoxydable - fundicion AISI 304

Rodete y difusor en acero inoxydable microfundido AISI 304

Robustezza ineguagliabile	Rendimento ai vertici del settore 77% - 81% - massima efficienza energetica
Heavy Duty construction	*Superior efficiency: 77% - 81 % High Energy Saving*
Durabilité	Rendement superieur: 77% - 81% Eficacité énergetique trés élevée
Durabilidad	*Rendimiento superior: 77% - 81% Máxima eficiencia energética*

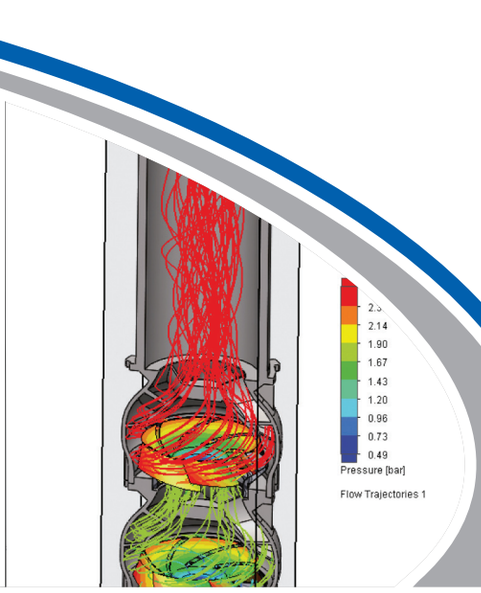

PANELLI®

italian excellence since 1906

6" 8" 10" 12"

140 SX
180 SX
230 SX
270 SX

60Hz

POMPA SOMMERSA SEMIASSIALE INOX
SEMIAXIAL SUBMERSIBLE PUMP - INOX

Casted

ELETTROPOMPE SOMMERSE SEMIASSIALI 6"/8"/10"/12" SERIE 140/180/230/270 SX, IN ACCIAIO INOX MICROFUSO AISI 304
Le pompe sommerse semiassiali sono caratterizzate da stadi formati dal corpo diffusore incorporato e girante semi- assiale. Questo tipo di soluzione, rispetto a quella radiale, è ideale quando sono richieste à parità di diametro, medio-alte portate, con medie prevalenze.
Adatte a sollevamento di acqua pulita, per approvvigionamento idrico ad uso civile ed industriale, impianti di pressurizzazione, antincendio ed irrigazione, acquedotti.

VANTAGGI
Progetto innovativo (L'acciaio inox AISI 304 ottenuto con il processo di microfusione permette di ottenere) :
- rendimenti elevati
- notevole durate nel tempo (minore usura)
- facilità di smontaggio
- ridotta manutenzione - bassi costi di esercizio

MATERIALI
- Girante, diffusore , gabbia di aspirazione e corpo valvola in acciaio inox Aisi 304 microfuso
- Albero pompa in acciaio inox Aisi 304
- Anelli di usura, bronzine, guarnizione valvola in gomma NBR
- Anello di controspinta in PTFE+25% GRAFITE)

CAMPI DI PRESTAZIONE IDRAULICHE
- Portate fino a 650 m^3/h, Prevalenze fino a 450 metri, Potenze fino a 400 kW
- Massima quantità di sabbia ammessa : 50g/m^3
- Massima profondità di immersione : 350 metri

6"/8"/10"/12" SUBMERSIBLE SEMIAXIAL PUMPS SERIES 140/180/230/270 SX, IN AISI 304 CASTED STAINLESS STEEL
Semiaxial submersible pumps thanks to the design of impellers and diffusers are suitable for mid-high capacities up to mid Head values.
Suitable for clean water supply in domestic, industrial, pressure boosters, firefighting systems, irrigation and water system networks.

ADVANTAGES
Panelli innovative design and the most advanced micro casting technologies allow:
- High efficiency
- Longer life
- Easy assembly/ disassembly
- Low maintenance
- Low operating cost

MATERIALS
- Impellers, diffusers, suction cage and delivery bowl in AISI 304 casted stainless steel
- Pump shaft in AISI 304 stainless steel
- Wear rings, bearing buses, valve seal in NBR
- Counter thrust in PTFE+25% GRAFITE

HYDRAULIC PERFORMANCES
- Capacity up to 650 m^3/h, Head up to 450 m, Power up to 400 kW
- Maximum sand tolerance : 50g/m^3
- Maximum depth : 350 metres

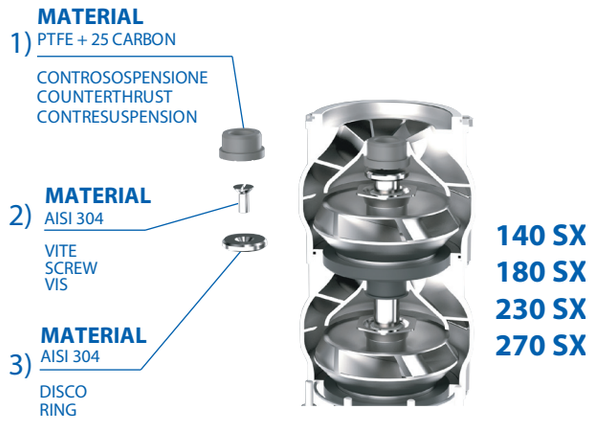

Tolleranza alla sabbia 50 g/m^3 - sand tolerance 50 g/m^3
Tolleranze secondo UNI ISO 9906 livello 3B - Tolerances according to UNI ISO 9906 grade 3B

PANELLI®

italian excellence since 1906

6" 8" 10" 12"

140 SX
180 SX
230 SX
270 SX

60Hz

POMPA SOMMERSA SEMIASSIALE INOX
SEMIAXIAL SUBMERSIBLE PUMP - INOX

Casted

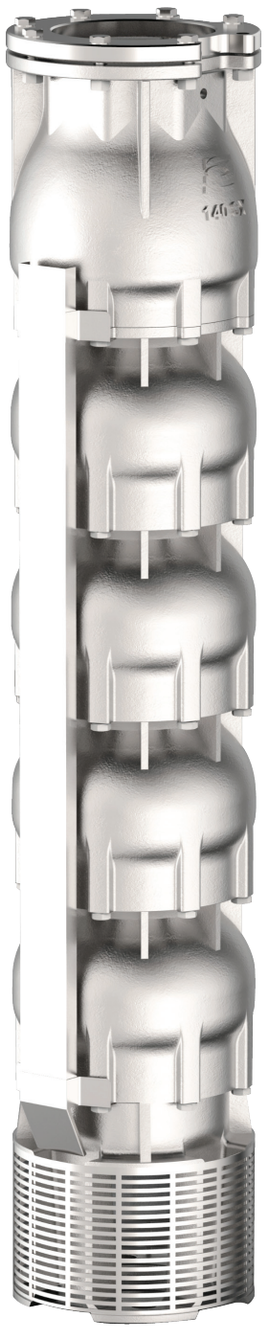

POMPES IMMERGÉES SEMIAXIALES 6"/8"/10"/12" SERIE 140/180/230/270 SX, EN ACIER INOXYDABLE AISI 304 MICROFUSION

Les pompes immergées semiaxiales grâce au design des roues et des diffuseurs peuvent produire des débit moyens-élevés et des hauteurs moyennes. Les pompes sont conçues pour des eaux claires dans toutes applications domestiques, industrielles, systèmes de surpression, groupe incendie, irrigation et réseaux d'eau publiques.

ADVANTAGES

L'innovatif projet Panelli et les technologies de microfusion les plus modernes permettent d'obtenir:
- *Très hautes efficiences*
- *Durée de vie importante*
- *Facilité de montage et démontage*
- *Manutention réduite*
- *Couts d'exercice réduits*

MATERIAUX

- *Roues, diffuseurs, cage d'aspiration et refoulement en axier inoxydable AISI 304 en microfusion*
- *Axe de la pompe en acier inoxydable AISI 304*
- *Bagues d'usure, bagues, anneau du clapet en caoutchouc NBR*
- *Contresuspension en PTFE+25% GRAFITE*

PERFORMANCES HYDRAULIQUES

Débit jusqu'à 650 m^3/h, Hauteur jusqu'à 450 m, Puissance jusqu'à 400 kW
Tolerance de sable maximum : 50 g/m^3
Profondité maximum d'immersion : 350 métres

BOMBAS SUMERGIBLES SEMIAXIALES 6"/8"/10"/12" SERIE 140/180/230/270 SX, EN ACERO INOXIDABLE AISI 304 MICROFUNDIDO

Las bombas sumergibles semiaxiales gracias al diseño de los impulsores y de los cuerpos se adaptan a caudales medio-elevados y alturas media. Concebidas para el bombeo de aguas limpias en aplicaciones civiles e industriales para el suministro de agua a nivel doméstico, industrial, en grupos de presión, sistemas contra incendio, riego y sistemas de agua pública.

VENTAJAS

El diseño innovativo Panelli y las tecnologias de microfusión más modernas garantizan:
- *Eficiencias elevadas*
- *Durada de vida muy importante*
- *Facilidad de montaje y desmontaje*
- *Manutención mínima*
- *Costos de utilización muy limitados*

MATERIALES

- *Impulsores, difusores, caja de aspiración e impulsión en acero inoxidable AISI 304 microfundido*
- *Eje de bomba en acero inoxidable AISI 304*
- *Anillos de desgaste, buje y anillo válvula en goma NBR*
- *Contrasuspensión en PTFE+25% GRAFITE*

PRESTACIONES HIDRAULICAS

Caudales hasta 650 m^3/h, Altura manométrica hasta 450 m, Potencia hasta 400 kW
Cantidad mãx de arena contenida en el agua: 50g/m^3, Sumergencia mãx: 350 metros

Tolleranza alla sabbia 50 g/m^3 - sand tolerance 50 g/m^3
Tolleranze secondo UNI ISO 9906 livello 3B - Tolerances according to UNI ISO 9906 grade 3B

acciaio inox microfuso - elevato rendimento - casted stainless steel - high efficiency

6″ 140 SX34

PANELLI®

CARATTERISTICHE IDRAULICHE - HYDRAULIC PERFORMANCES

Q= Portata - Capacity - Debit **60 Hz n= 3450 min**

Tipo Type	Power kW	Power HP	l/min	0	360	480	600	720	840	960
			l/sec	0	6	8	10	12	14	16
			m³/h	0	21,6	28,8	36	43,2	50,4	57,6
140 SX 34/01	3	4	H(m)	21	18	17	16	15	13	10
140 SX 34/02	5,5	7,5		41	37	35	33	29	25	20
140 SX 34/03	7,5	10		62	55	52	49	44	38	29
140 SX 34/04	9,2	12,5		82	73	69	65	59	50	39
140 SX 34/05	13	17,5		103	91	86	81	73	63	49
140 SX 34/06	15	20		124	110	104	98	88	75	59
140 SX 34/07	18,5	25		144	128	121	114	103	88	69
140 SX 34/08	18,5	25		165	146	138	130	118	100	78
140 SX 34/09	22	30		185	165	156	146	132	113	88
140 SX 34/10	26	35		206	183	173	163	147	125	98
140 SX 34/11	26	35		227	201	190	179	162	138	108
140 SX 34/12	30	40		247	219	207	195	176	150	118
140 SX 34/13	30	40		268	238	225	212	191	163	127
140 SX 34/14	37	50		288	256	242	228	206	175	137
140 SX 34/15	37	50		309	274	259	244	220	188	147
140 SX 34/16	37	50		329	293	276	260	235	200	157

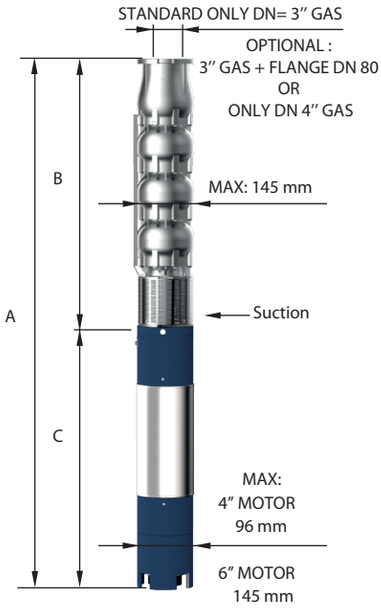

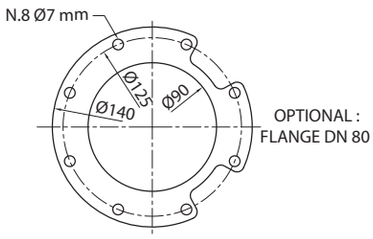

FOR COMMERCIAL TUBE
EXTERNAL DIAMETER: 88,9 mm

DIMENSIONI D'INGOMBRO E PESI - OVERALL DIMENSIONS AND WEIGHTS

Type	A mm Tri V 460	B mm	C mm Tri	M Kg Tri	P Kg
140 SX 34/01	951	394	557	19	8
140 SX 34/02	1193	495	698	27	12
140 SX 34/03	1297	596	701	55	15
140 SX 34/04	1448	697	751	60	19
140 SX 34/05	1639	798	841	70	22
140 SX 34/06	1830	899	931	75	26
140 SX 34/07	1991	1000	991	83	29
140 SX 34/08	2092	1101	991	83	33
140 SX 34/09	2273	1202	1071	92	37
140 SX 34/10	2484	1303	1181	100	40
140 SX 34/11	2585	1404	1181	100	44
140 SX 34/12	2756	1505	1251	108	47
140 SX 34/13	2857	1606	1251	108	51
140 SX 34/14	3048	1707	1341	118	54
140 SX 34/15	3149	1808	1341	118	58
140 SX 34/16	3250	1909	1341	118	61

n% = Rendimento della pompa
n% = Rendement de la pompe
n% = Pump efficiency
n% = Rendimiento de la bomba

Max 76%

kW/st = Assorbimento per stadio
kW/st = Absorption par étage
kW/st = Stage absorption
kW/st = Potencia absorbida por etapa

Max 2,30

Tolleranza alla sabbia 50 g/m³ - Sand tolerance 50 g/m³ - Compatibilità con acqua potabile DM 174 Drinking water compatibility according to DM 174
Tolleranze secondo UNI ISO 9906 livello 3B - Tolerances according to UNI ISO 9906 grade 3B

PANELLI®

6"

140 SX34

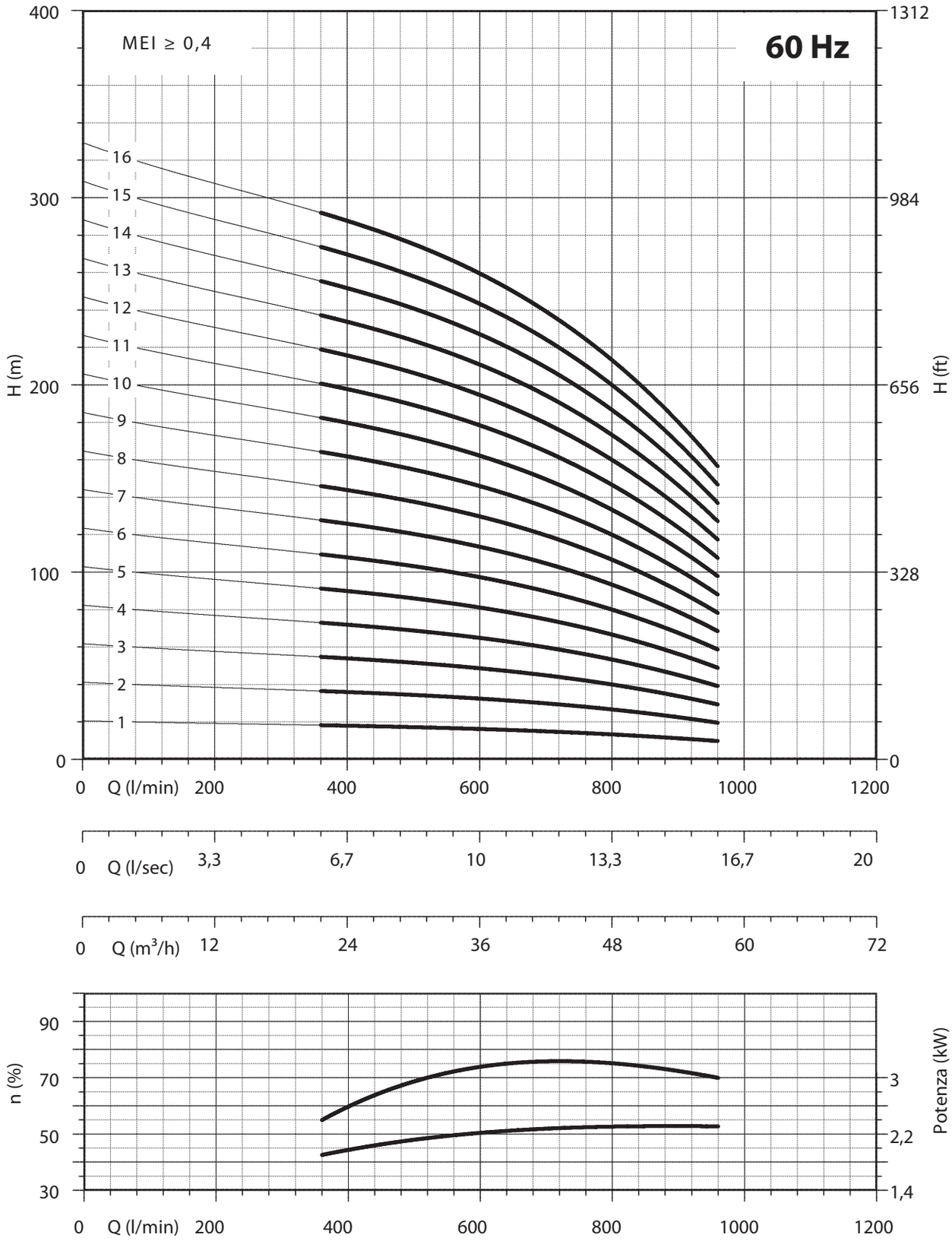

NPSH (m)	25%	50%	75%	100%
140 SX 34	3,4	3,4	3,8	8

6″ 140 SX44

PANELLI®

CARATTERISTICHE IDRAULICHE - HYDRAULIC PERFORMANCES

Q= Portata - Capacity - Debit **60 Hz n= 3450 min**

Tipo Type	Power kW	Power HP	l/min	0	480	600	720	840	960	1080	1200
			l/sec	0	8	10	12	14	16	18	20
			m³/h	0	28,8	36	43,2	50,4	57,6	64,8	72
140 SX 44/01	3	4	H(m)	20	16	16	15	14	13	11	9
140 SX 44/02	5,5	7,5		40	33	32	31	28	25	21	18
140 SX 44/03	7,5	10		60	49	48	46	42	38	32	28
140 SX 44/04	11	15		81	66	64	61	56	51	43	37
140 SX 44/05	13	17,5		101	82	80	76	71	63	53	46
140 SX 44/06	15	20		121	98	96	92	85	76	64	55
140 SX 44/07	18,5	25		141	115	112	107	99	89	75	65
140 SX 44/08	22	30		161	131	128	122	113	101	85	74
140 SX 44/09	26	35		181	148	144	137	127	114	96	83
140 SX 44/10	26	35		202	164	160	153	141	127	107	92
140 SX 44/11	30	40		222	181	176	168	155	139	117	101
140 SX 44/12	30	40		242	197	192	183	169	152	128	111
140 SX 44/13	37	50		262	213	208	198	183	165	139	120
140 SX 44/14	37	50		282	230	224	214	198	177	149	129
140 SX 44/15	37	50		302	246	240	229	212	190	160	138

DIMENSIONI D'INGOMBRO E PESI - OVERALL DIMENSIONS AND WEIGHTS

Type	A mm Tri V 460	B mm	C mm Tri	M Kg Tri	P Kg
140 SX 44/01	951	394	557	19	8
140 SX 44/02	1193	495	698	27	12
140 SX 44/03	1297	596	701	55	15
140 SX 44/04	1508	697	811	65	19
140 SX 44/05	1639	798	841	70	22
140 SX 44/06	1830	899	931	75	26
140 SX 44/07	1991	1000	991	83	29
140 SX 44/08	2172	1101	1071	92	33
140 SX 44/09	2383	1202	1181	100	37
140 SX 44/10	2484	1303	1181	100	40
140 SX 44/11	2655	1404	1251	108	44
140 SX 44/12	2756	1505	1251	108	47
140 SX 44/13	2947	1606	1341	118	51
140 SX 44/14	3048	1707	1341	118	54
140 SX 44/15	3149	1808	1341	118	58

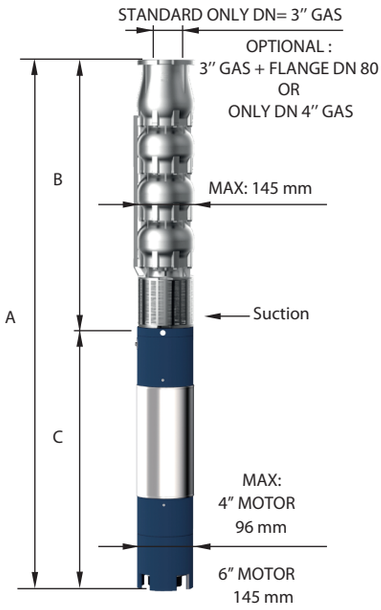

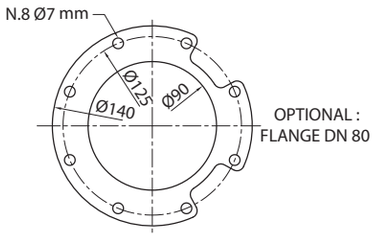

FOR COMMERCIAL TUBE
EXTERNAL DIAMETER: 88,9 mm

n% = Rendimento della pompa
n% = Rendement de la pompe
n% = Pump efficiency
n% = Rendimiento de la bomba

Max 78,5%

kW/st = Assorbimento per stadio
kW/st = Absorption par étage
kW/st = Stage absorption
kW/st = Potencia absorbida por etapa

Max 2,5

Tolleranza alla sabbia 50 g/m³ - Sand tolerance 50 g/m³ - Compatibilità con acqua potabile DM 174 Drinking water compatibility according to DM 174
Tolleranze secondo UNI ISO 9906 livello 3B - Tolerances according to UNI ISO 9906 grade 3B

PANELLI®

6"

140 SX44

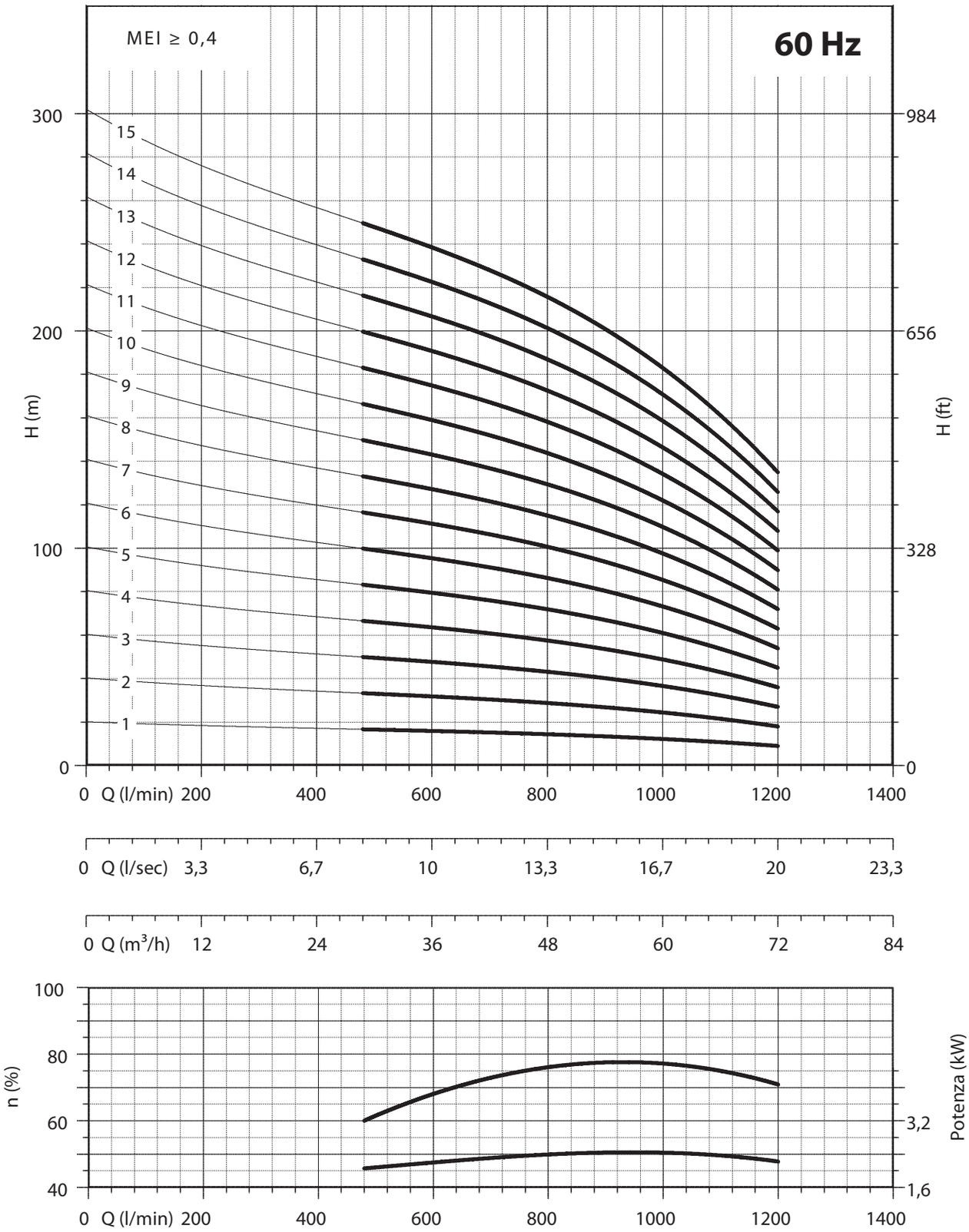

NPSH (m)	25%	50%	75%	100%
140 SX 44	3,45	3,5	3,8	5

6″ 140 SX54

PANELLI®

CARATTERISTICHE IDRAULICHE - HYDRAULIC PERFORMANCES

Q= Portata - Capacity - Debit **60 Hz n= 3450 min**

Tipo Type	Power kW	Power HP	l/min	0	720	840	960	1080	1200	1320	1440
			l/sec	0	12	14	16	18	20	22	24
			m³/h	0	43,2	50,4	57,6	64,8	72	79,2	86,4
140 SX 54/01	3	4	H(m)	20	15	14	13	12	11	10	9
140 SX 54/02	5,5	7,5		39	30	28	26	24	22	20	17
140 SX 54/03	9,2	12,5		59	44	41	39	37	34	30	26
140 SX 54/04	13	17,5		79	59	55	52	49	45	40	35
140 SX 54/05	15	20		99	74	69	66	61	56	50	43
140 SX 54/06	18,5	25		118	89	83	79	73	67	60	52
140 SX 54/07	22	30		138	104	97	92	86	79	70	60
140 SX 54/08	26	35		158	119	111	105	98	90	79	69
140 SX 54/09	26	35		178	133	124	118	110	101	89	78
140 SX 54/10	30	40		197	148	138	131	122	112	99	86
140 SX 54/11	37	50		217	163	152	144	135	124	109	95
140 SX 54/12	37	50		237	178	166	157	147	135	119	104
140 SX 54/13	37	50		256	193	180	170	159	146	129	112

DIMENSIONI D'INGOMBRO E PESI - OVERALL DIMENSIONS AND WEIGHTS

Type	A mm Tri V 460	B mm	C mm Tri	M Kg Tri	P Kg
140 SX 54/01	957	400	557	19	8
140 SX 54/02	1205	507	698	27	12
140 SX 54/03	1365	614	751	60	16
140 SX 54/04	1562	721	841	70	20
140 SX 54/05	1759	828	931	75	24
140 SX 54/06	1926	935	991	83	27
140 SX 54/07	2113	1042	1071	92	31
140 SX 54/08	2330	1149	1181	100	35
140 SX 54/09	2437	1256	1181	100	39
140 SX 54/10	2614	1363	1251	108	43
140 SX 54/11	2811	1470	1341	118	46
140 SX 54/12	2918	1577	1341	118	50
140 SX 54/13	3025	1684	1341	118	54

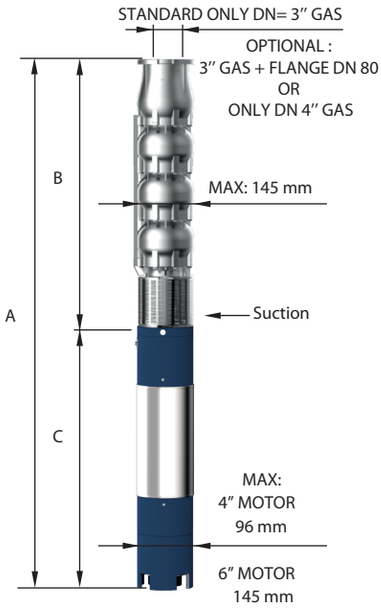

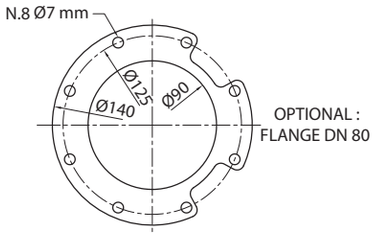

FOR COMMERCIAL TUBE
EXTERNAL DIAMETER: 88,9 mm

n% = Rendimento della pompa
n% = Rendement de la pompe
n% = Pump efficiency
n% = Rendimiento de la bomba

Max 77%

kW/st = Assorbimento per stadio
kW/st = Absorption par étage
kW/st = Stage absorption
kW/st = Potencia absorbida por etapa

Max 2,85

Tolleranza alla sabbia 50 g/m³ - Sand tolerance 50 g/m³ - Compatibilità con acqua potabile DM 174 Drinking water compatibility according to DM 174
Tolleranze secondo UNI ISO 9906 livello 3B - Tolerances according to UNI ISO 9906 grade 3B

PANELLI®

6"

140 SX54

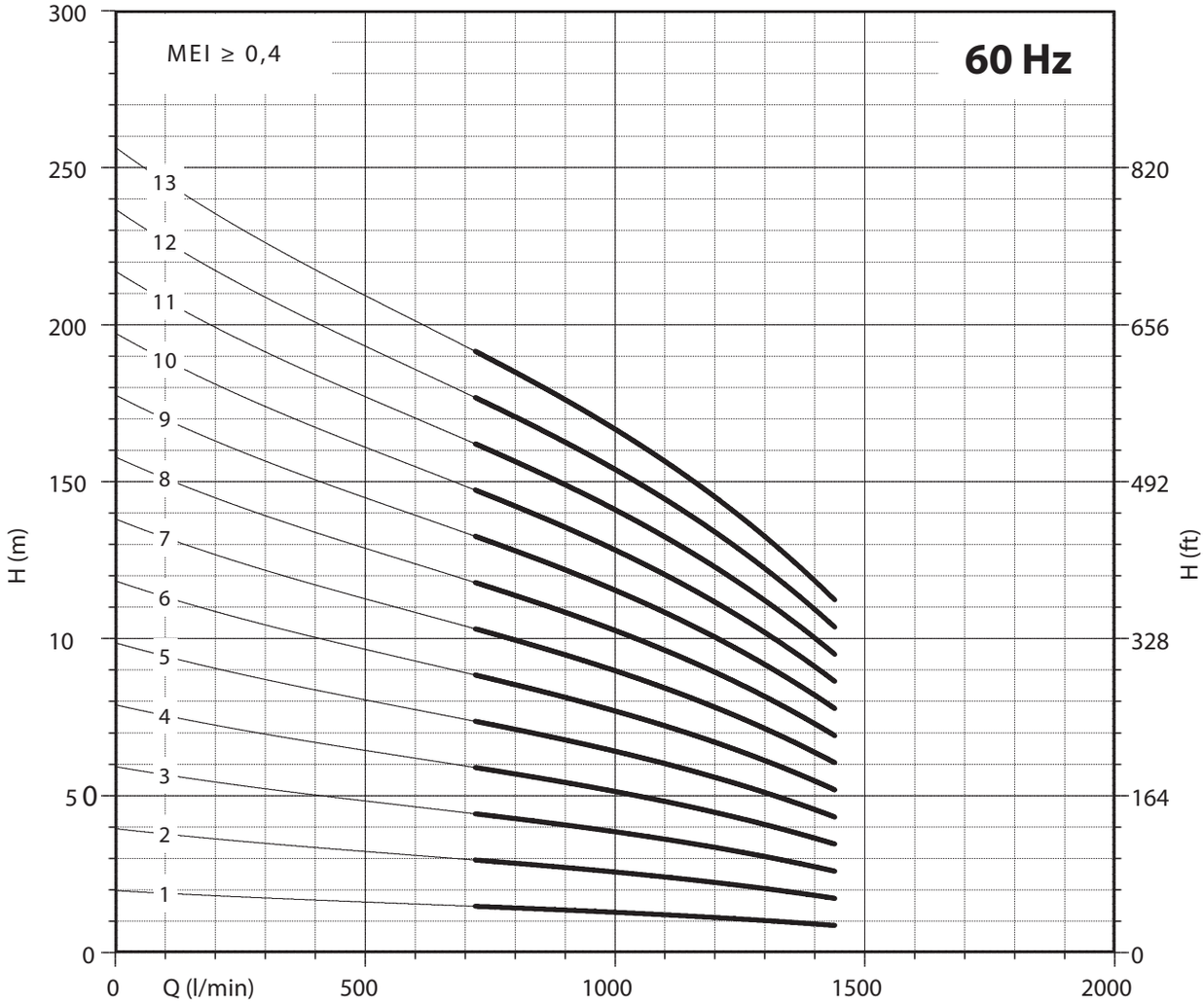

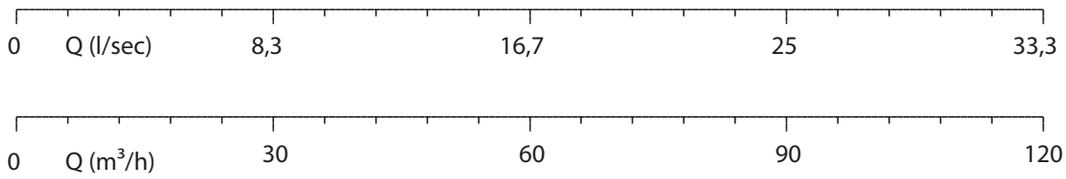

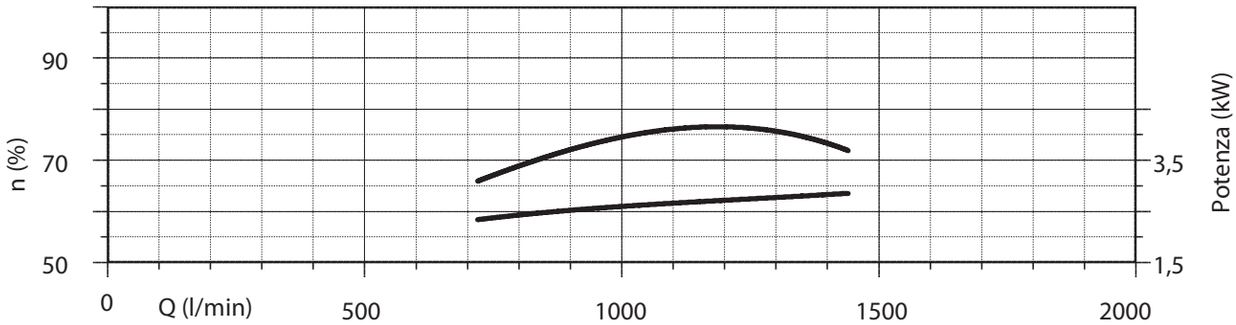

NPSH (m)	25%	50%	75%	100%
140 SX 54	3,8	3,8	5,1	7,1

acciaio inox microfuso - elevato rendimento - casted stainless steel - high efficiency

6″ 140 SX64

PANELLI®

CARATTERISTICHE IDRAULICHE - HYDRAULIC PERFORMANCES

Q= Portata - Capacity - Debit **60 Hz n= 3450 min**

Tipo Type	Power kW	Power HP	l/min	0	840	960	1080	1200	1320	1440	1560	1680	1800
			l/sec	0	14	16	18	20	22	24	26	28	30
			m³/h	0	50,4	57,6	64,8	72	79,2	86,4	93,6	100,8	108
140 SX 64/01	4	5,5	H(m)	18,9	15	14,3	13,7	13,5	13,1	12,2	10,9	9,5	8,1
140 SX 64/02	7,5	10		37,7	30	28,5	27,4	27,1	26,2	24,5	21,9	19,0	16,1
140 SX 64/03	11	15		56,6	44,9	42,8	41,0	40,6	39,3	36,7	32,8	28,5	24,2
140 SX 64/04	15	20		75	60	57	55	54	52	49	44	38	32
140 SX 64/05	18,5	25		94	75	71	68	68	66	61	55	48	40
140 SX 64/06	22	30		113	90	86	82	81	79	73	66	57	48
140 SX 64/07	26	35		132	105	100	96	95	92	86	77	67	56
140 SX 64/08	30	40		151	120	114	109	108	105	98	88	76	65
140 SX 64/09	37	50		170	135	128	123	122	118	110	98	86	73
140 SX 64/10	37	50		189	150	143	137	135	131	122	109	95	81

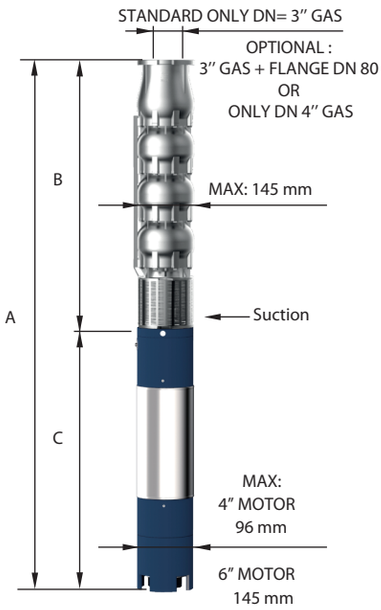

DIMENSIONI D'INGOMBRO E PESI - OVERALL DIMENSIONS AND WEIGHTS

Type	A mm Tri V 460	B mm	C mm Tri	M Kg Tri	P Kg
140 SX 64/01	997	400	597	22	9
140 SX 64/02	1208	507	701	55	14
140 SX 64/03	1425	614	811	65	18
140 SX 64/04	1652	721	931	75	23
140 SX 64/05	1819	828	991	83	27
140 SX 64/06	2006	935	1071	92	32
140 SX 64/07	2223	1042	1181	100	36
140 SX 64/08	2400	1149	1251	108	41
140 SX 64/09	2597	1256	1341	118	45
140 SX 64/10	2704	1363	1341	118	50

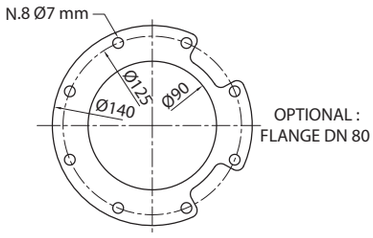

FOR COMMERCIAL TUBE
EXTERNAL DIAMETER: 88,9 mm

n% = Rendimento della pompa
n% = Rendement de la pompe
n% = Pump efficiency
n% = Rendimiento de la bomba

Max 76%

kW/st = Assorbimento per stadio
kW/st = Absorption par étage
kW/st = Stage absorption
kW/st = Potencia absorbida por etapa

Max 3,8

Tolleranza alla sabbia 50 g/m³ - Sand tolerance 50 g/m³ - Compatibilità con acqua potabile DM 174 Drinking water compatibility according to DM 174
Tolleranze secondo UNI ISO 9906 livello 3B - Tolerances according to UNI ISO 9906 grade 3B

PANELLI®

6"

140 SX64

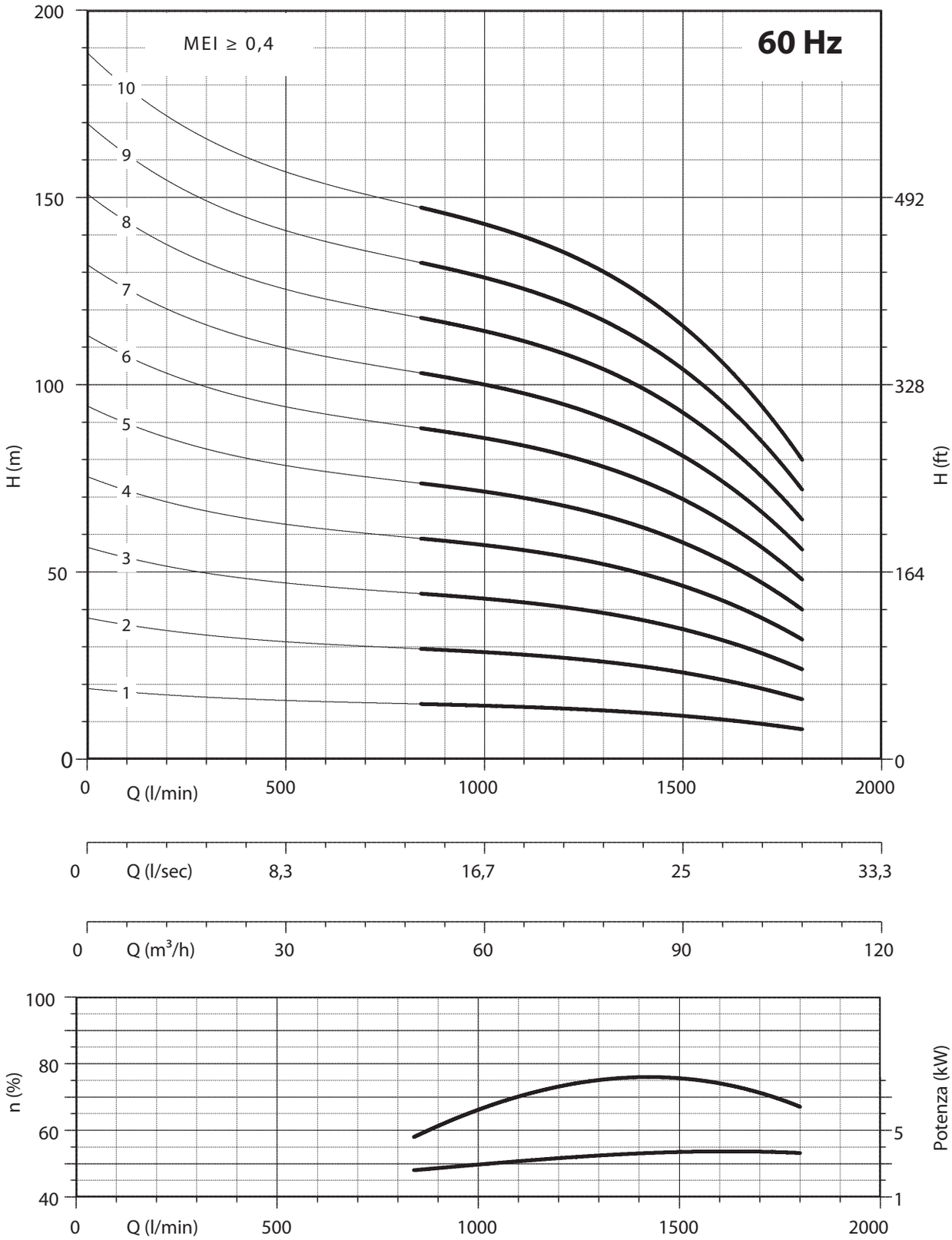

NPSH (m)	25%	50%	75%	100%
140 SX 64	3,8	3,8	5,1	7,1

8″ 180 SX78

PANELLI®

CARATTERISTICHE IDRAULICHE - HYDRAULIC PERFORMANCES

Q= Portata - Capacity - Debit **60 Hz n= 3450 min**

Tipo Type	Power kW	Power HP	l/min	0	720	960	1200	1440	1680	1920
			l/sec	0	12	16	20	24	28	32
			m³/h	0	43,2	57,6	72	86,4	100,8	115,2
180 SX 78/01	11	15	H(m)	39	35	34	31	29	25	21
180 SX 78/02	22	30		78	70	67	63	58	50	43
180 SX 78/03	30	40		117	105	101	94	86	76	64
180 SX 78/04	44	60		156	140	134	126	115	101	85
180 SX 78/05	55	75		194	175	168	157	144	126	107
180 SX 78/06	66	90		233	210	201	188	173	151	128
180 SX 78/07	75	100		272	245	235	220	202	176	149
180 SX 78/08	92	125		311	280	268	251	230	202	170
180 SX 78/09	92	125		350	315	302	283	259	227	192
180 SX 78/10	110	150		389	350	336	314	288	252	213
180 SX 78/11	110	150		428	385	369	345	317	277	234
180 SX 78/12	129	175		467	420	403	377	346	302	256
180 SX 78/13	129	175		505	455	436	408	374	328	277

DIMENSIONI D'INGOMBRO E PESI - OVERALL DIMENSIONS AND WEIGHTS

Type	A mm Tri V 460	B mm	C mm Tri	M Kg Tri	P Kg
180 SX 78/01	1336	525	811	65	19
180 SX 78/02	1721	650	1071	92	26
180 SX 78/03	2026	775	1251	108	32
180 SX 78/04	2023	900	1123	178	39
180 SX 78/05	2258	1025	1233	200	45
180 SX 78/06	2453	1150	1303	214	52
180 SX 78/07	2658	1275	1383	230	58
180 SX 78/08	2983	1400	1583	270	65
180 SX 78/09	3108	1525	1583	270	71
180 SX 78/10	3383	1650	1733	300	78
180 SX 78/11	3508	1775	1733	300	84
180 SX 78/12	3534	1900	1634	385	91
180 SX 78/13	3659	2025	1634	385	97

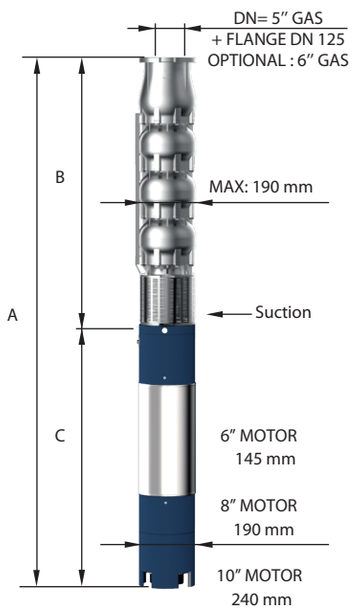

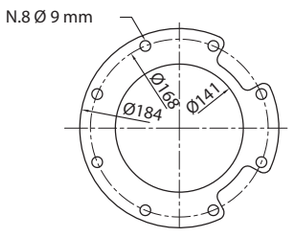

FOR COMMERCIAL TUBE
EXTERNAL DIAMETER: 139,7 mm

n% = Rendimento della pompa
n% = Rendement de la pompe
n% = Pump efficiency
n% = Rendimiento de la bomba

Max 74%

kW/st = Assorbimento per stadio
kW/st = Absorption par étage
kW/st = Stage absorption
kW/st = Potencia absorbida por etapa

Max 9,95

Tolleranza alla sabbia 50 g/m³ - Sand tolerance 50 g/m³ - Compatibilità con acqua potabile DM 174 Drinking water compatibility according to DM 174
Tolleranze secondo UNI ISO 9906 livello 3B - Tolerances according to UNI ISO 9906 grade 3B

PANELLI®

8"

180 SX78

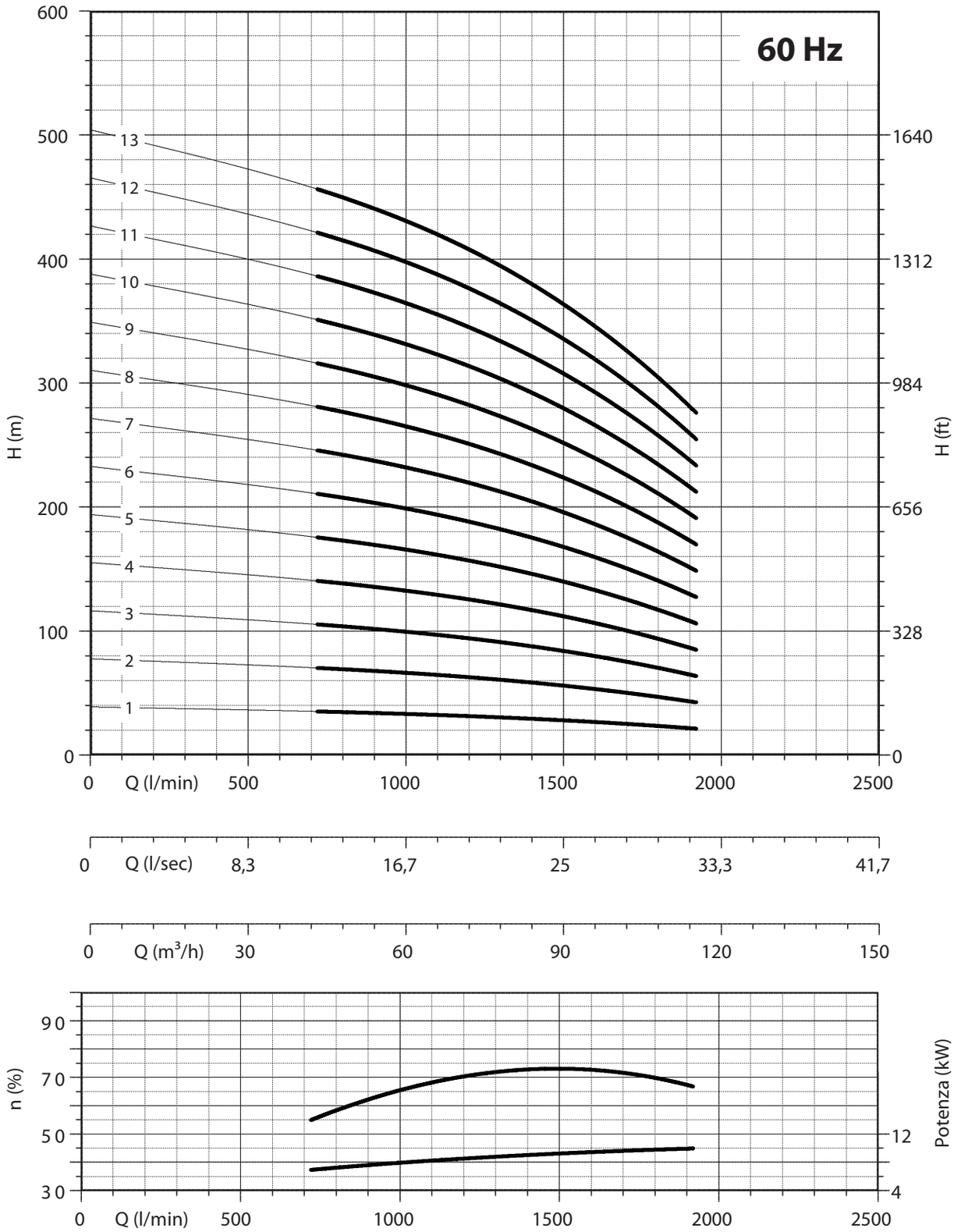

NPSH (m)	25%	50%	75%	100%
180 SX 78	3	3	3,5	4,5

acciaio inox microfuso - elevato rendimento - casted stainless steel - high efficiency

8″ 180 SX90

PANELLI®

CARATTERISTICHE IDRAULICHE - HYDRAULIC PERFORMANCES

Q= Portata - Capacity - Debit **60 Hz n= 3450 min**

Tipo Type	Power kW	Power HP	l/min	0	960	1200	1440	1680	1920	2160	2400
			l/sec	0	16	20	24	28	32	36	40
			m³/h	0	57,6	72	86,4	100,8	115,2	129,6	144
180 SX 90/01	11	15	H(m)	39	35	34	31	29	26	22	18
180 SX 90/02	22	30		78	70	67	63	58	52	45	36
180 SX 90/03	37	50		117	105	101	94	87	77	67	54
180 SX 90/04	44	60		156	140	134	126	116	103	89	73
180 SX 90/05	55	75		194	175	168	157	145	129	112	91
180 SX 90/06	66	90		233	210	201	188	174	155	134	109
180 SX 90/07	92	125		272	245	235	220	203	180	156	127
180 SX 90/08	92	125		311	280	268	251	232	206	179	145
180 SX 90/09	110	150		350	315	302	283	260	232	201	163
180 SX 90/10	110	150		389	350	336	314	289	258	223	181
180 SX 90/11	129	175		428	385	369	345	318	284	246	200
180 SX 90/12	147	200		467	420	403	377	347	309	268	218
180 SX 90/13	147	200		505	455	436	408	376	335	290	236

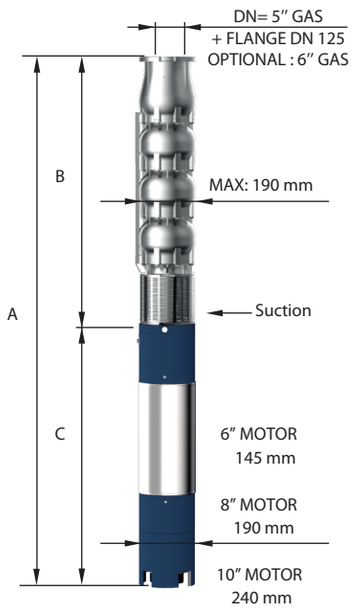

DIMENSIONI D'INGOMBRO E PESI - OVERALL DIMENSIONS AND WEIGHTS

Type	A mm Tri V 460	B mm	C mm Tri	M Kg Tri	P Kg
180 SX 90/01	1336	525	811	65	19
180 SX 90/02	1721	650	1071	92	26
180 SX 90/03	2116	775	1341	118	32
180 SX 90/04	2023	900	1123	178	39
180 SX 90/05	2258	1025	1233	200	45
180 SX 90/06	2453	1150	1303	214	52
180 SX 90/07	2858	1275	1583	270	58
180 SX 90/08	2983	1400	1583	270	65
180 SX 90/09	3258	1525	1733	300	71
180 SX 90/10	3383	1650	1733	300	78
180 SX 90/11	3409	1775	1634	385	84
180 SX 90/12	3634	1900	1734	415	91
180 SX 90/13	3759	2025	1734	415	97

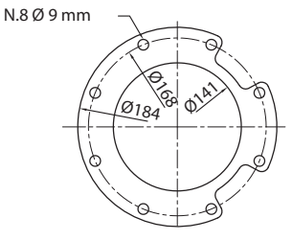

FOR COMMERCIAL TUBE
EXTERNAL DIAMETER: 139,7 mm

n% = Rendimento della pompa
n% = Rendement de la pompe
n% = Pump efficiency
n% = Rendimiento de la bomba

Max 75%

kW/st = Assorbimento per stadio
kW/st = Absorption par étage
kW/st = Stage absorption
kW/st = Potencia absorbida por etapa

Max 11,2

Tolleranza alla sabbia 50 g/m³ - Sand tolerance 50 g/m³ - Compatibilità con acqua potabile DM 174 Drinking water compatibility according to DM 174
Tolleranze secondo UNI ISO 9906 livello 3B - Tolerances according to UNI ISO 9906 grade 3B

PANELLI®

8"

180 SX90

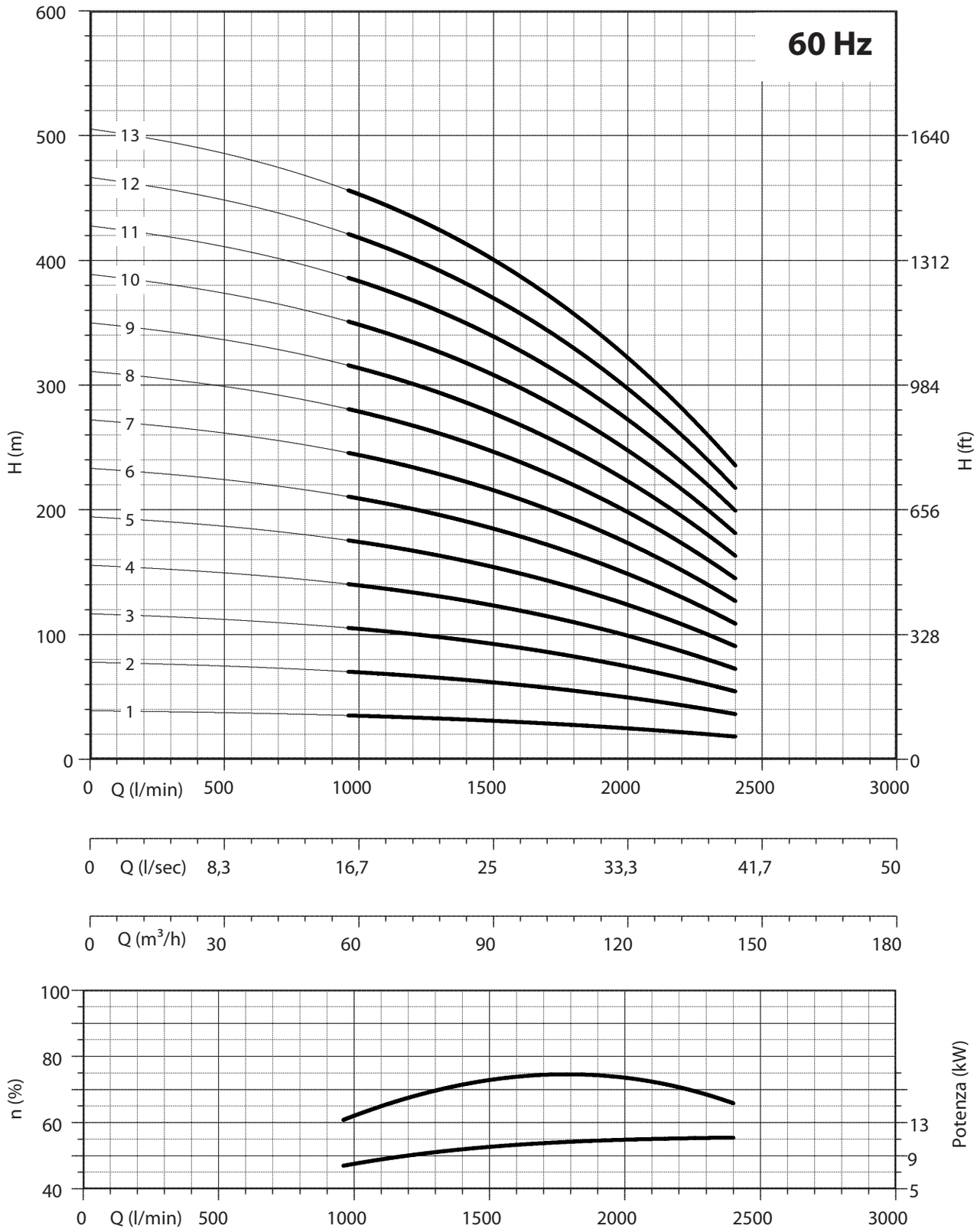

NPSH (m)	25%	50%	75%	100%
180 SX 90	2,5	2,9	3,9	7,8

acciaio inox microfuso - elevato rendimento - casted stainless steel - high efficiency

8″

180 SX102

PANELLI®

CARATTERISTICHE IDRAULICHE - HYDRAULIC PERFORMANCES

Q= Portata - Capacity - Debit **60 Hz n= 3450 min**

Tipo Type	Power kW	Power HP	l/min	0	1200	1440	1680	1920	2160	2400	2640	2880
			l/sec	0	20	24	28	32	36	40	44	48
			m³/h	0	72	86,4	100,8	115,2	129,6	144	158,4	172,8
180 SX 102/01	13	17,5	H(m)	40	32	31	30	29	28	25	22	18
180 SX 102/02	26	35		79	65	63	61	59	55	50	44	37
180 SX 102/03	37	50		119	97	94	91	88	83	75	67	55
180 SX 102/04	55	75		158	130	126	122	118	110	100	89	74
180 SX 102/05	66	90		198	162	157	152	147	138	125	111	92
180 SX 102/06	75	100		238	194	188	182	176	165	149	133	111
180 SX 102/07	92	125		277	227	220	213	206	193	174	155	129
180 SX 102/08	110	150		317	259	251	243	235	220	199	177	147
180 SX 102/09	110	150		356	292	283	273	264	248	224	200	166
180 SX 102/10	129	175		396	324	314	304	294	275	249	222	184
180 SX 102/11	147	200		436	356	345	334	323	303	274	244	203
180 SX 102/12	147	200		475	389	377	365	353	330	299	266	221

DIMENSIONI D'INGOMBRO E PESI - OVERALL DIMENSIONS AND WEIGHTS

Type	A mm Tri V 460	B mm	C mm Tri	M Kg Tri	P Kg
180 SX 102/01	1366	525	841	70	19
180 SX 102/02	1831	650	1181	100	26
180 SX 102/03	2116	775	1341	118	33
180 SX 102/04	2133	900	1233	200	40
180 SX 102/05	2328	1025	1303	214	47
180 SX 102/06	2533	1150	1383	230	53
180 SX 102/07	2858	1275	1583	270	60
180 SX 102/08	3133	1400	1733	300	67
180 SX 102/09	3258	1525	1733	300	74
180 SX 102/10	3284	1650	1634	385	81
180 SX 102/11	3509	1775	1734	415	87
180 SX 102/12	3634	1900	1734	415	94

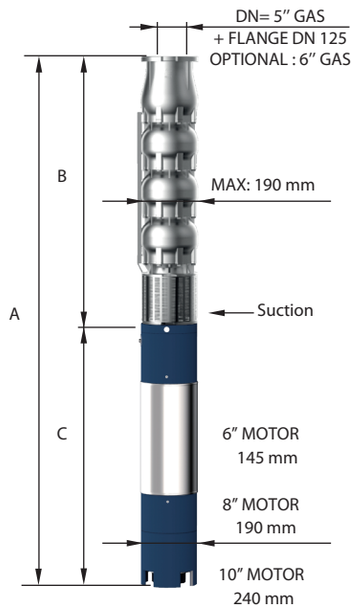

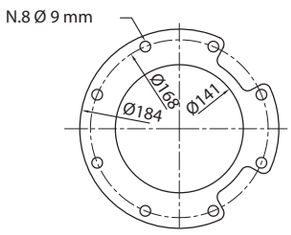

FOR COMMERCIAL TUBE
EXTERNAL DIAMETER: 139,7 mm

n% = Rendimento della pompa
n% = Rendement de la pompe
n% = Pump efficiency
n% = Rendimiento de la bomba

Max 77%

kW/st = Assorbimento per stadio
kW/st = Absorption par étage
kW/st = Stage absorption
kW/st = Potencia absorbida por etapa

Max 12,5

Tolleranza alla sabbia 50 g/m³ - Sand tolerance 50 g/m³ - Compatibilità con acqua potabile DM 174 Drinking water compatibility according to DM 174
Tolleranze secondo UNI ISO 9906 livello 3B - Tolerances according to UNI ISO 9906 grade 3B

PANELLI®

8" 180 SX102

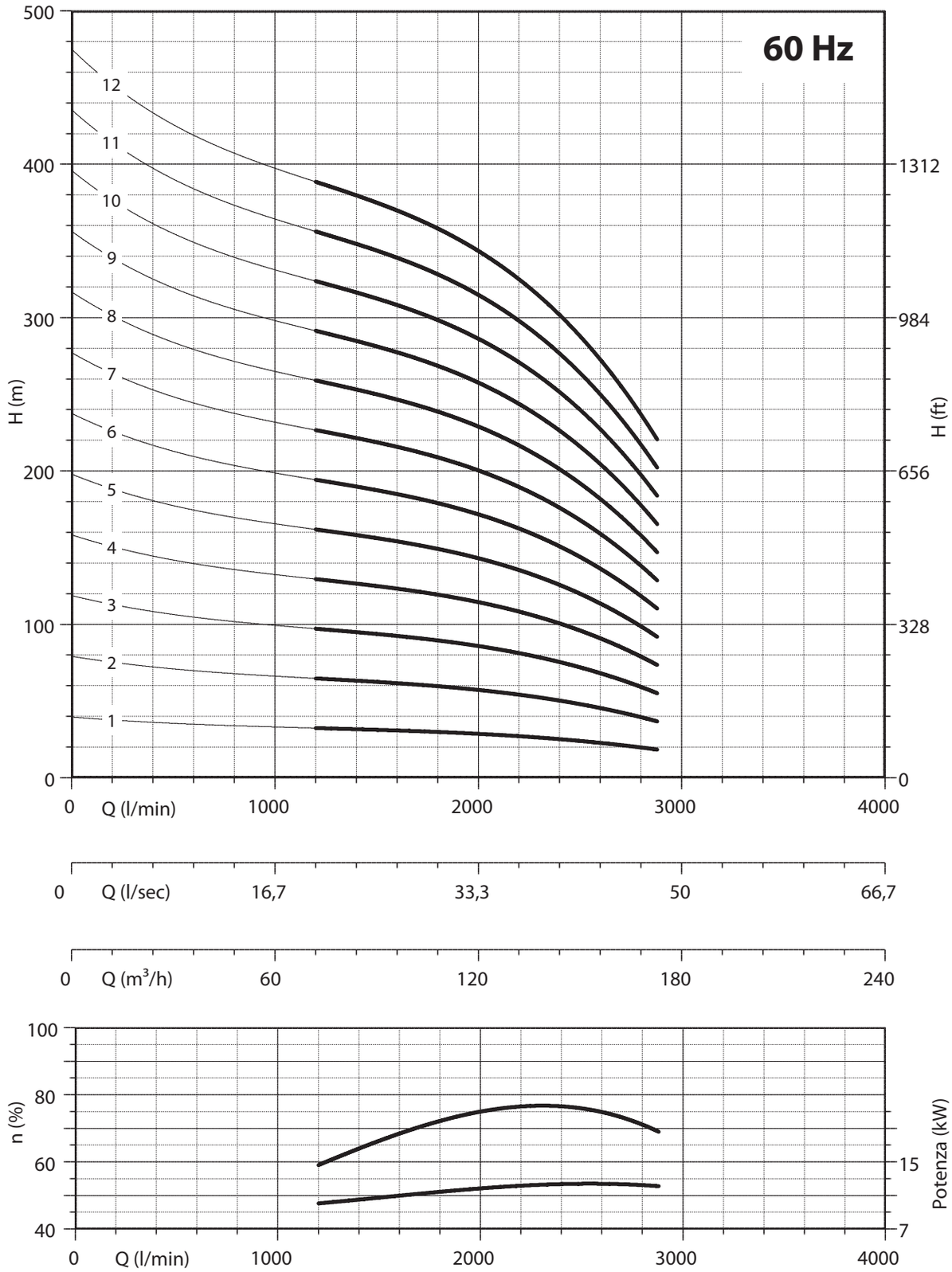

NPSH (m)	25%	50%	75%	100%
180 SX 102	2,5	2,9	3,9	7,8

acciaio inox microfuso - elevato rendimento - casted stainless steel - high efficiency

8″

180 SX124

PANELLI®

CARATTERISTICHE IDRAULICHE - HYDRAULIC PERFORMANCES

Q= Portata - Capacity - Debit **60 Hz n= 3450 min**

Tipo Type	Power kW	Power HP	l/min	0	1440	1680	1920	2160	2400	2640	2880	3120	3360
			l/sec	0	24	28	32	36	40	44	48	52	56
			m³/h	0	86,4	100,8	115,2	129,6	144	158,4	172,8	187,2	201,6
180 SX 124/01	15	20	H(m)	39	32	31	30	29	27	26	24	21	17
180 SX 124/02	30	40		78	65	62	60	57	55	52	47	42	35
180 SX 124/03	44	60		117	97	93	89	86	82	78	71	63	52
180 SX 124/04	66	90		156	130	124	119	114	109	104	94	84	69
180 SX 124/05	75	100		194	162	155	149	143	137	130	118	104	86
180 SX 124/06	92	125		233	194	186	179	171	164	156	142	125	104
180 SX 124/07	110	150		272	227	217	209	200	192	181	165	146	121
180 SX 124/08	129	175		311	259	248	238	228	219	207	189	167	138
180 SX 124/09	129	175		350	292	279	268	257	246	233	213	188	156
180 SX 124/10	147	200		389	324	310	298	285	274	259	236	209	173

DIMENSIONI D'INGOMBRO E PESI - OVERALL DIMENSIONS AND WEIGHTS

Type	A mm Tri V 460	B mm	C mm Tri	M Kg Tri	P Kg
180 SX 124/01	1456	525	931	75	20
180 SX 124/02	1901	650	1251	108	27
180 SX 124/03	1898	775	1123	178	34
180 SX 124/04	2203	900	1303	214	41
180 SX 124/05	2408	1025	1383	230	48
180 SX 124/06	2733	1150	1583	270	55
180 SX 124/07	3008	1275	1733	300	62
180 SX 124/08	3034	1400	1634	385	69
180 SX 124/09	3159	1525	1634	385	76
180 SX 124/10	3384	1650	1734	415	83

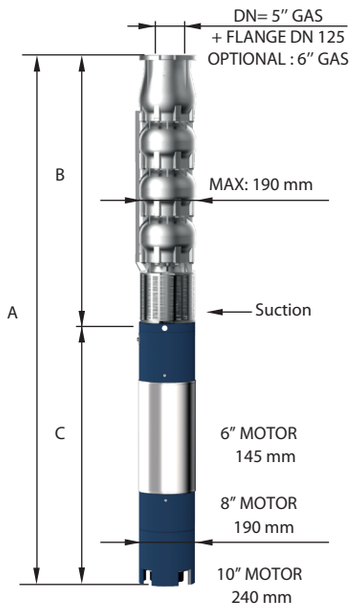

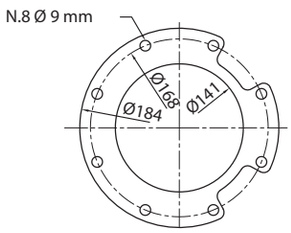

FOR COMMERCIAL TUBE
EXTERNAL DIAMETER: 139,7 mm

n% = Rendimento della pompa
n% = Rendement de la pompe
n% = Pump efficiency
n% = Rendimiento de la bomba

Max 78%

kW/st = Assorbimento per stadio
kW/st = Absorption par étage
kW/st = Stage absorption
kW/st = Potencia absorbida por etapa

Max 14,5

Tolleranza alla sabbia 50 g/m³ - Sand tolerance 50 g/m³ - Compatibilità con acqua potabile DM 174 Drinking water compatibility according to DM 174
Tolleranze secondo UNI ISO 9906 livello 3B - Tolerances according to UNI ISO 9906 grade 3B

PANELLI®

8" 180 SX124

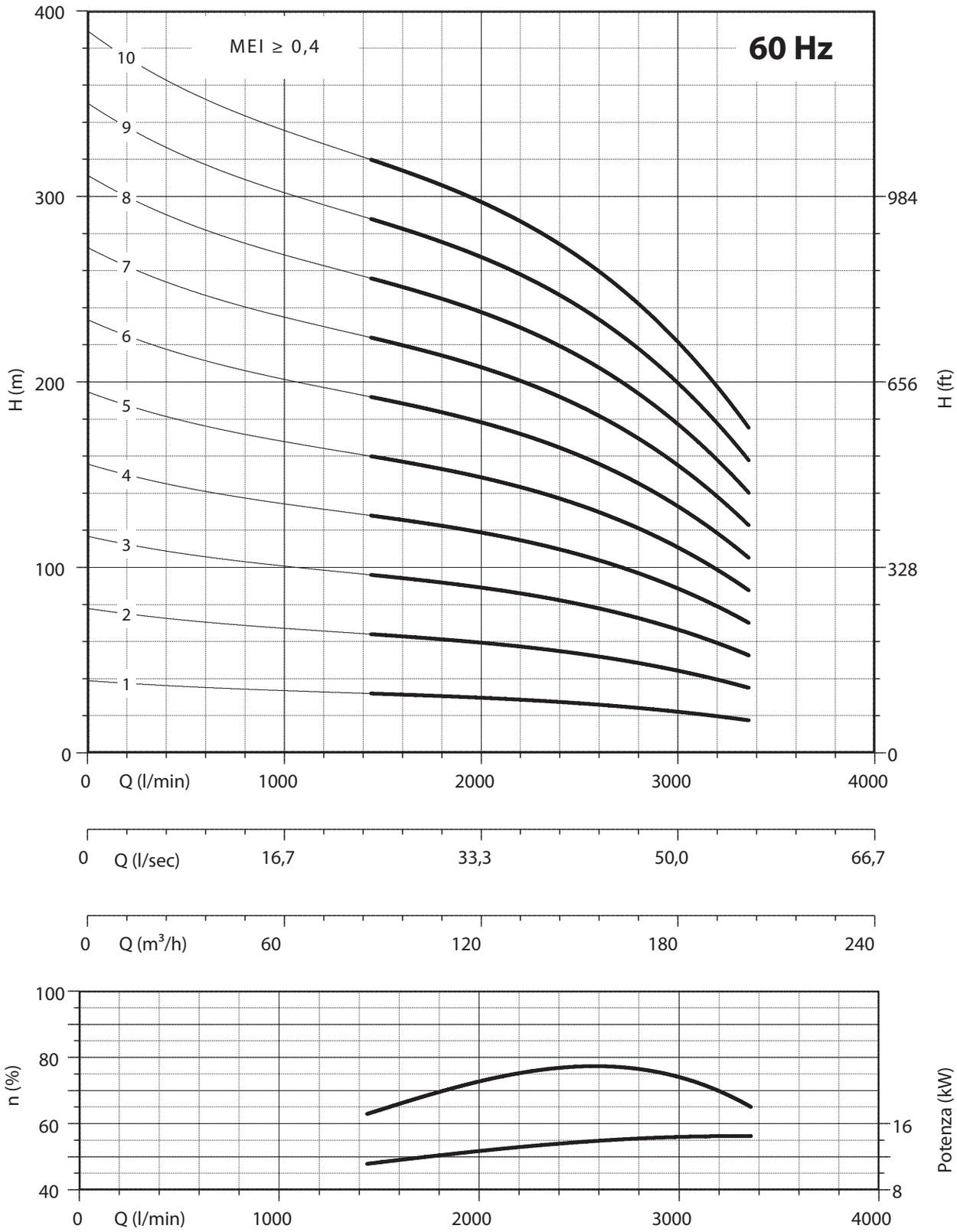

NPSH (m)	25%	50%	75%	100%
180 SX 124	2,5	3	3,5	8,7

8″ 180 SX140

PANELLI®

CARATTERISTICHE IDRAULICHE - HYDRAULIC PERFORMANCES

Q= Portata - Capacity - Debit **60 Hz n= 3450 min**

Tipo Type	Power kW	Power HP	l/min	0	1920	2160	2400	2640	2880	3120	3360	3600	3840
			l/sec	0	32	36	40	44	48	52	56	60	64
			m³/h	0	115,2	129,6	144	158,4	172,8	187,2	201,6	216	230,4
180 SX 140/01	18,5	25	H(m)	36	29	28	27	26	25	24	22	20	17
180 SX 140/02	37	50		72	58	56	54	52	50	48	45	40	35
180 SX 140/03	55	75		108	86	83	81	78	75	72	67	60	52
180 SX 140/04	66	90		144	115	111	108	104	100	96	89	79	69
180 SX 140/05	92	125		180	144	139	135	130	125	120	112	99	86
180 SX 140/06	110	150		216	173	167	162	156	150	143	134	119	104
180 SX 140/07	129	175		252	202	195	190	182	175	167	156	139	121
180 SX 140/08	129	175		288	230	222	217	209	200	191	179	159	138
180 SX 140/09	147	200		324	259	250	244	235	226	215	201	179	156

DIMENSIONI D'INGOMBRO E PESI - OVERALL DIMENSIONS AND WEIGHTS

Type	A mm Tri V 460	B mm	C mm Tri	M Kg Tri	P Kg
180 SX 140/01	1541	550	991	83	20
180 SX 140/02	2041	700	1341	118	28
180 SX 140/03	2083	850	1233	200	35
180 SX 140/04	2303	1000	1303	214	43
180 SX 140/05	2733	1150	1583	270	50
180 SX 140/06	3033	1300	1733	300	58
180 SX 140/07	3084	1450	1634	385	65
180 SX 140/08	3234	1600	1634	385	73
180 SX 140/09	3484	1750	1734	415	80

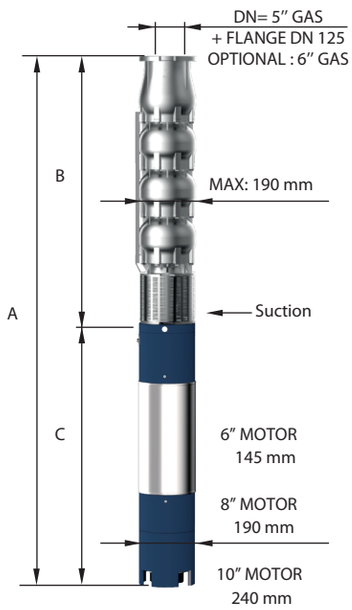

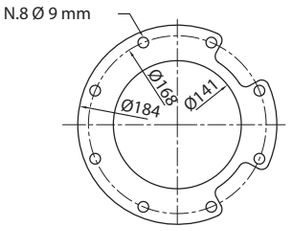

FOR COMMERCIAL TUBE
EXTERNAL DIAMETER: 139,7 mm

n% = Rendimento della pompa
n% = Rendement de la pompe
n% = Pump efficiency
n% = Rendimiento de la bomba

Max 78,5%

kW/st = Assorbimento per stadio
kW/st = Absorption par étage
kW/st = Stage absorption
kW/st = Potencia absorbida por etapa

Max 16,3

Tolleranza alla sabbia 50 g/m³ - Sand tolerance 50 g/m³ - Compatibilità con acqua potabile DM 174 Drinking water compatibility according to DM 174
Tolleranze secondo UNI ISO 9906 livello 3B - Tolerances according to UNI ISO 9906 grade 3B

PANELLI®

8″

180 SX140

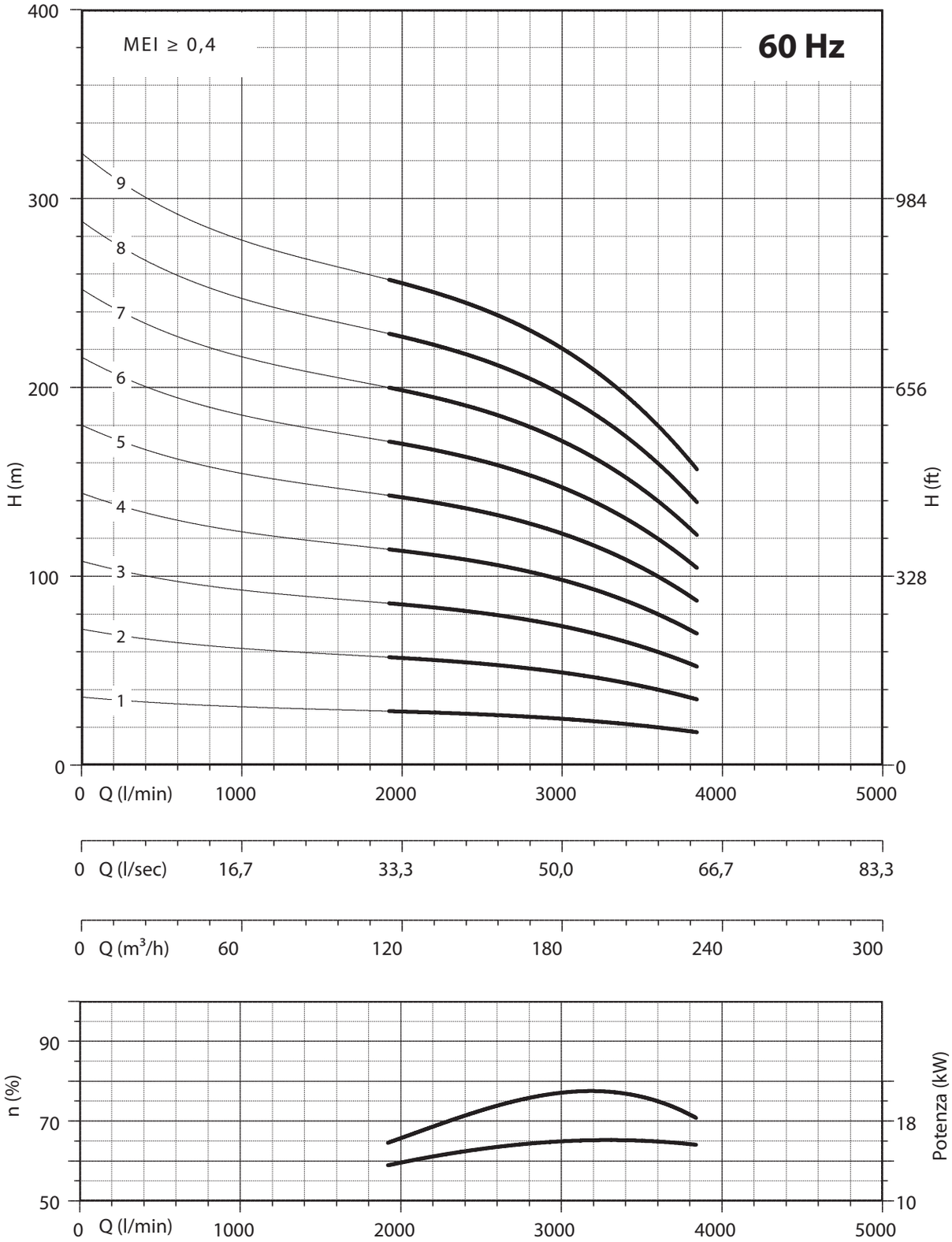

NPSH (m)	25%	50%	75%	100%
180 SX 140	4	4,5	7	13

10" 230 SX200

PANELLI®

CARATTERISTICHE IDRAULICHE - HYDRAULIC PERFORMANCES

Q= Portata - Capacity - Debit **60 Hz n= 3450 min**

Tipo Type	Power kW	Power HP	l/min	0	2160	2640	3120	3600	4080	4560	4800
			l/sec	0	36	44	52	60	68	76	80
			m³/h	0	129,6	158,4	187,2	216	244,8	273,5	287,9
230 SX 200/1 DR 20	30	40	H(m)	50	46	43	39	35	30	24	20
230 SX 200/1 DR 10	37	50		55	50	48	44	40	35	29	25
230 SX 200/1	37	50		60	55	52	49	45	40	34	30
230 SX 200/2 DR 20	55	75		100	91	86	79	70	59	47	40
230 SX 200/2 DR 10	66	90		109	101	95	88	79	69	57	50
230 SX 200/2	75	100		120	111	105	98	89	79	67	59
230 SX 200/3 DR 20	92	125		149	137	129	118	105	89	71	60
230 SX 200/3 DR 10	110	150		164	151	143	132	119	104	86	75
230 SX 200/3	110	150		180	166	157	147	134	119	101	89
230 SX 200/4 DR 20	110	150		199	182	172	158	141	119	94	81
230 SX 200/4 DR 10	129	175		219	202	190	176	159	138	114	100
230 SX 200/4	147	200		240	221	210	196	179	159	135	119
230 SX 200/5 DR 20	147	200		249	228	215	197	176	148	118	101
230 SX 200/5 DR 10	165	225		274	252	238	220	199	173	143	125
230 SX 200/5	185	250		300	276	262	245	223	199	168	148
230 SX 200/6 DR 20	165	225		299	273	257	237	211	178	142	121
230 SX 200/6 DR 10	220	300		328	302	285	264	238	207	171	150
230 SX 200/6	220	300		359	332	314	294	268	238	202	178

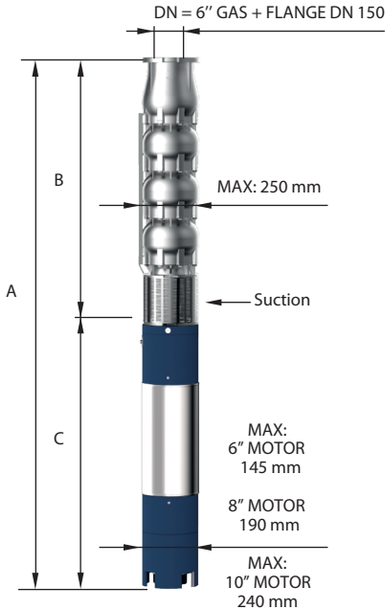

DIMENSIONI D'INGOMBRO E PESI - OVERALL DIMENSIONS AND WEIGHTS

Type	A mm Tri V 460	B mm	C mm Tri	M Kg Tri	P Kg
230 SX 200/1 DR 20	1876	625	1251	108	41
230 SX 200/1 DR 10	1966	625	1341	118	41
230 SX 200/1	1966	625	1341	118	41
230 SX 200/2 DR 20	2038	805	1233	200	56
230 SX 200/2 DR 10	2108	805	1303	214	56
230 SX 200/2	2188	805	1383	230	56
230 SX 200/3 DR 20	2568	985	1583	270	72
230 SX 200/3 DR 10	2718	985	1733	300	72
230 SX 200/3	2718	985	1733	300	72
230 SX 200/4 DR 20	2898	1165	1733	300	87
230 SX 200/4 DR 10	2799	1165	1634	385	87
230 SX 200/4	2899	1165	1734	415	87
230 SX 200/5 DR 20	3079	1345	1734	415	103
230 SX 200/5 DR 10	3199	1345	1854	444	103
230 SX 200/5	3329	1345	1984	480	103
230 SX 200/6 DR 20	3379	1525	1854	444	118
230 SX 200/6 DR 10	0	1525	0	0	118
230 SX 200/6	0	1525	0	0	118

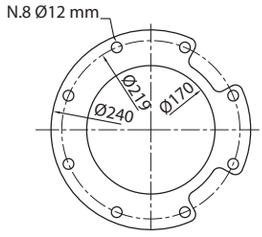

FOR COMMERCIAL TUBE
EXTERNAL DIAMETER: 168,3 mm

	Max	DR 10	DR 20
n% = Rendimento della pompa *n% = Rendement de la pompe* n% = Pump efficiency *n% = Rendimiento de la bomba*	**77%**	**Max 77,5%**	**Max 76,5%**
kW/st = Assorbimento per stadio *kW/st = Absorption par étage* kW/st = Stage absorption *kW/st = Potencia absorbida por etapa*	**36**	**Max 32**	**Max 27,7**

Tolleranza alla sabbia 50 g/m³ - Sand tolerance 50 g/m³ - Compatibilità con acqua potabile DM 174 Drinking water compatibility according to DM 174
Tolleranze secondo UNI ISO 9906 livello 3B - Tolerances according to UNI ISO 9906 grade 3B

PANELLI®

10" 230 SX200

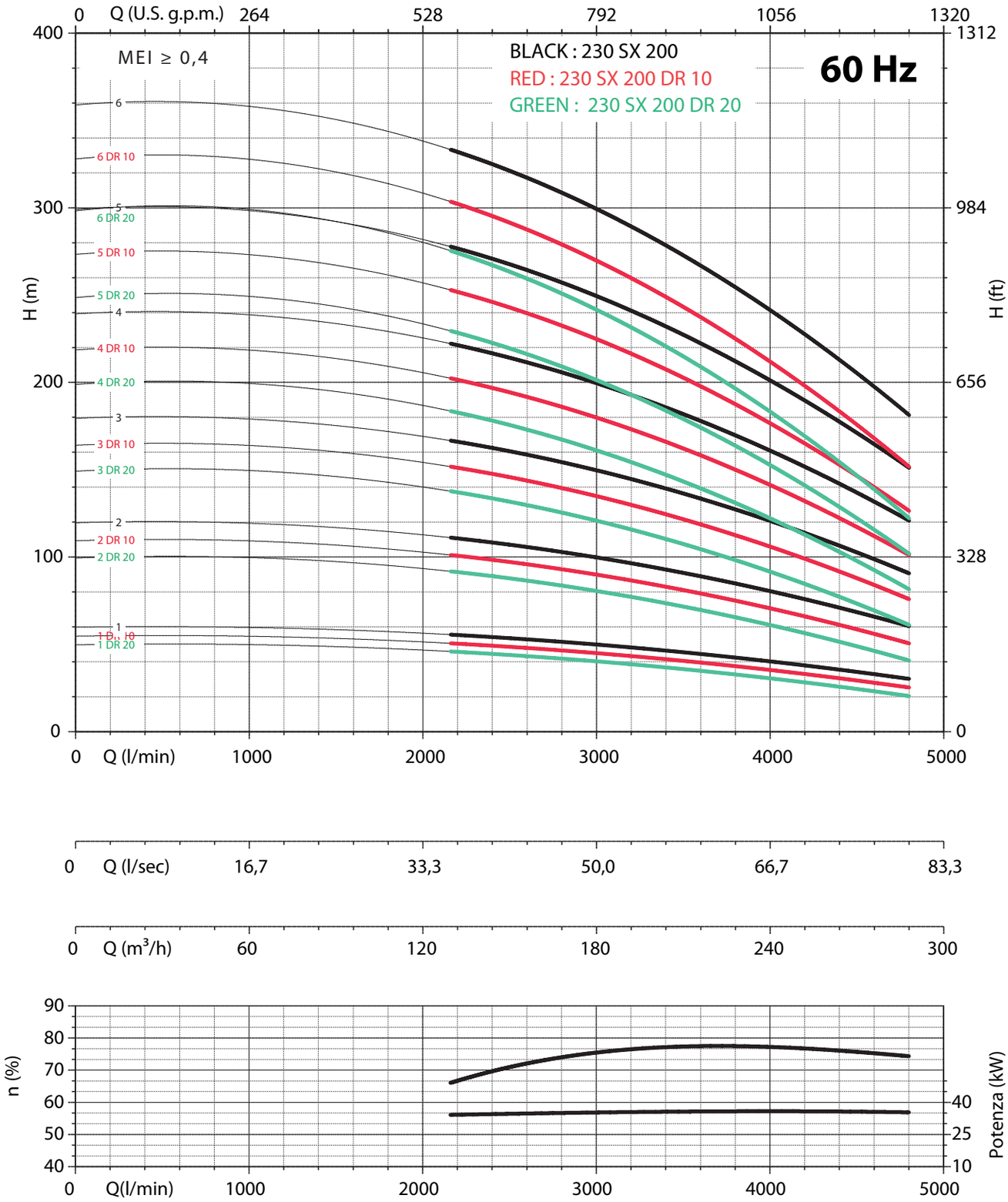

NPSH (m)	25%	50%	75%	100%
230 SX 200	3,4	5	7,8	11,8

10″ 230 SX220

PANELLI®

CARATTERISTICHE IDRAULICHE - HYDRAULIC PERFORMANCES

Q= Portata - Capacity - Debit **60 Hz n= 3450 min**

Tipo Type	Power kW	Power HP	l/min	0	2640	3120	3600	4080	4560	5040	5520
			l/sec	0	44	52	60	68	76	84	92
			m³/h	0	158,4	187,2	216	244,8	273,5	302,3	331,1
230 SX 220/1 DR 20	30	40	H(m)	53	45	42	39	36	33	27	23
230 SX 220/1 DR 10	37	50		58	49	47	44	41	37	33	28
230 SX 220/1	44	60		63	54	52	49	46	43	38	33
230 SX 220/2 DR 20	66	90		106	89	84	78	72	65	55	46
230 SX 220/2 DR 10	66	90		116	98	94	88	82	75	66	56
230 SX 220/2	92	125		126	108	104	98	92	85	76	66
230 SX 220/3 DR 20	92	125		159	134	125	117	108	98	82	69
230 SX 220/3 DR 10	110	150		175	147	141	132	124	112	98	85
230 SX 220/3	129	175		189	162	156	147	138	128	114	99
230 SX 220/4 DR 20	129	175		212	179	167	156	144	130	109	92
230 SX 220/4 DR 10	147	200		233	196	188	176	165	150	131	113
230 SX 220/4	165	225		252	217	207	196	184	170	152	132
230 SX 220/5 DR 20	165	225		265	223	209	194	180	163	137	115
230 SX 220/5 DR 10	185	250		291	245	235	220	206	187	164	141
230 SX 220/5	220	300		315	271	259	245	230	213	190	166
230 SX 220/6 DR 20	185	250		318	268	251	233	216	195	164	138
230 SX 220/6 DR 10	220	300		349	294	282	264	247	225	197	169
230 SX 220/6	250	340		378	325	311	294	276	256	228	199

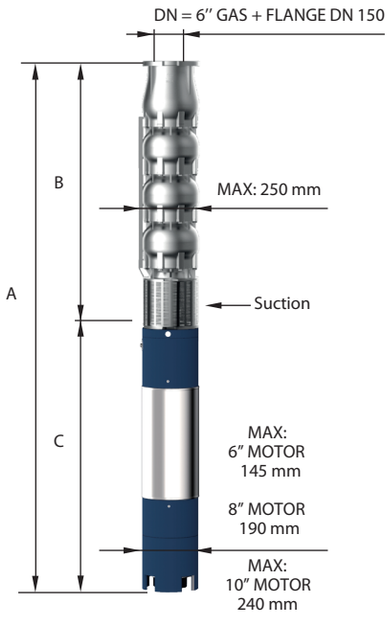

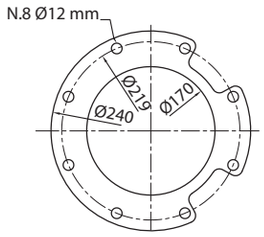

FOR COMMERCIAL TUBE
EXTERNAL DIAMETER: 168,3 mm

DIMENSIONI D'INGOMBRO E PESI - OVERALL DIMENSIONS AND WEIGHTS

Type	A mm Tri V 460	B mm	C mm Tri	M Kg Tri	P Kg
230 SX 220/1 DR 20	1876	625	1251	108	41
230 SX 220/1 DR 10	1966	625	1341	118	41
230 SX 220/1	1748	625	1123	178	41
230 SX 220/2 DR 20	2108	805	1303	214	56
230 SX 220/2 DR 10	2108	805	1303	214	56
230 SX 220/2	2388	805	1583	270	56
230 SX 220/3 DR 20	2568	985	1583	270	72
230 SX 220/3 DR 10	2718	985	1733	300	72
230 SX 220/3	2619	985	1634	385	72
230 SX 220/4 DR 20	2799	1165	1634	385	87
230 SX 220/4 DR 10	2899	1165	1734	415	87
230 SX 220/4	3019	1165	1854	444	87
230 SX 220/5 DR 20	3199	1345	1854	444	103
230 SX 220/5 DR 10	3329	1345	1984	480	103
230 SX 220/5	1345	1345	0	0	103
230 SX 220/6 DR 20	3509	1525	1984	480	118
230 SX 220/6 DR 10	1525	1525	0	0	118
230 SX 220/6	1525	1525	0	0	118

	Max	DR 10	DR 20
n% = Rendimento della pompa ***n% = Rendement de la pompe*** **n% = Pump efficiency** ***n% = Rendimiento de la bomba***	**79,2%**	**Max 79,5%**	**Max 78,4%**
kW/st = Assorbimento per stadio ***kW/st = Absorption par étage*** **kW/st = Stage absorption** ***kW/st = Potencia absorbida por etapa***	**Max 39,4**	**DR 10 Max 33,7**	**DR 20 Max 30,3**

Tolleranza alla sabbia 50 g/m³ - Sand tolerance 50 g/m³ - Compatibilità con acqua potabile DM 174 Drinking water compatibility according to DM 174
Tolleranze secondo UNI ISO 9906 livello 3B - Tolerances according to UNI ISO 9906 grade 3B

PANELLI® 10" 230 SX220

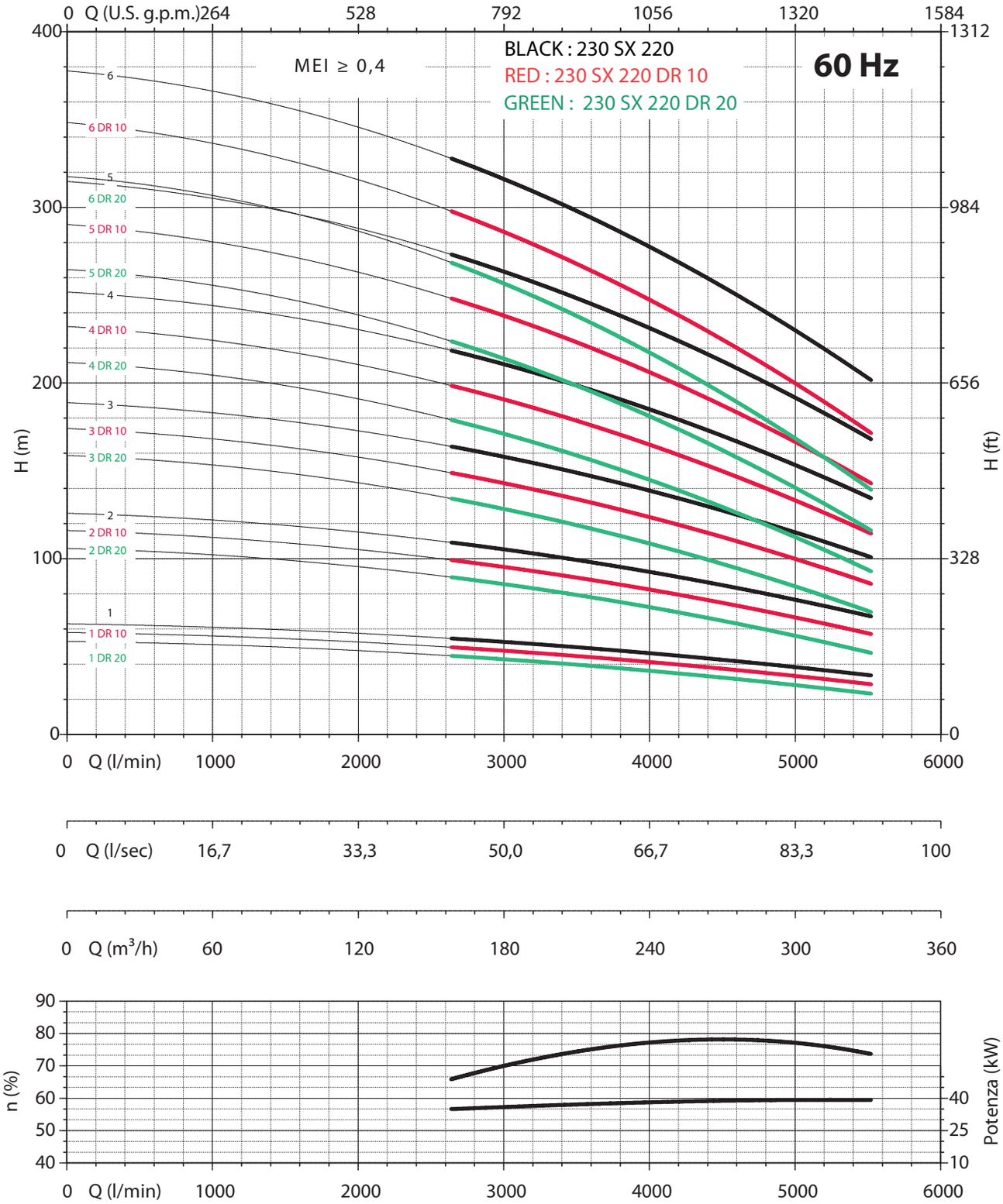

NPSH (m)	25%	50%	75%	100%
230 SX 220	3,4	5	7,8	11,8

10" 230 SX240

PANELLI®

CARATTERISTICHE IDRAULICHE - HYDRAULIC PERFORMANCES

Q= Portata - Capacity - Debit **60 Hz n= 3450 min**

Tipo Type	Power kW	Power HP	l/min	0	2880	3360	3840	4320	4800	5280	5760	6000	6240
			l/sec	0	48	56	64	72	80	88	96	100	104
			m³/h	0	172,8	201,6	230,4	259,1	287,9	316,7	345,5	359,9	374,3
230 SX 240/1 DR 20	30	40	H(m)	45	42	41	39	36	33	30	26	-	-
230 SX 240/1 DR 10	37	50		52	48	46	45	41	39	35	31	29	-
230 SX 240/1	55	75		63	53	50	48	46	43	40	37	36	35
230 SX 240/2 DR 20	66	90		90	84	81	78	73	67	60	51	-	-
230 SX 240/2 DR 10	75	100		103	96	93	89	83	77	70	63	57	
230 SX 240/2	92	125		127	105	100	97	92	85	80	75	72	69
230 SX 240/3 DR 20	92	125		135	126	122	117	109	100	91	77	-	-
230 SX 240/3 DR 10	129	175		155	143	139	134	124	116	105	94	86	-
230 SX 240/3	147	200		190	158	149	145	138	128	120	112	108	104
230 SX 240/4 DR 20	129	175		180	168	162	156	145	134	121	103	-	-
230 SX 240/4 DR 10	165	225		206	191	185	179	166	154	139	126	114	-
230 SX 240/4	220	300		253	211	199	194	184	170	160	150	144	138
230 SX 240/5 DR 20	165	225		225	210	203	194	181	167	151	128	-	-
230 SX 240/5 DR 10	220	300		258	239	232	223	207	193	174	157	143	-
230 SX 240/5	250	340		317	264	249	242	230	213	200	187	180	173
230 SX 240/6 DR 20	185	250		270	252	244	233	218	200	181	154	-	-
230 SX 240/6 DR 10	250	340		309	287	278	268	249	232	209	188	171	-
230 SX 240/6	300	400		380	316	299	290	276	256	240	225	216	207

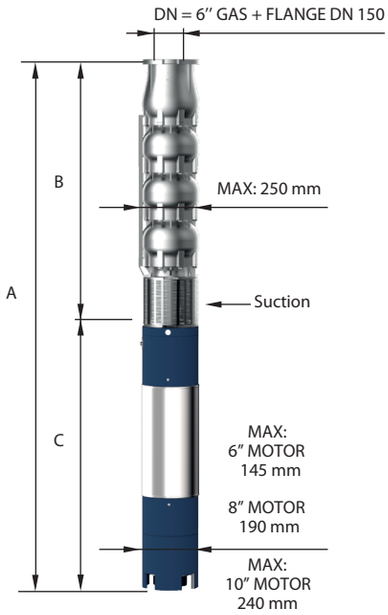

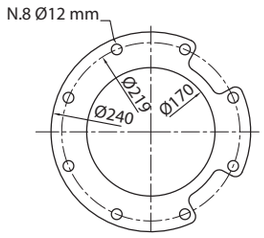

FOR COMMERCIAL TUBE
EXTERNAL DIAMETER: 168,3 mm

DIMENSIONI D'INGOMBRO E PESI - OVERALL DIMENSIONS AND WEIGHTS

Type	A mm Tri V 460	B mm	C mm Tri	M Kg Tri	P Kg
230 SX 240/1 DR 20	1876	625	1251	108	41
230 SX 240/1 DR 10	1966	625	1341	118	41
230 SX 240/1	1858	625	1233	200	41
230 SX 240/2 DR 20	2108	805	1303	214	56
230 SX 240/2 DR 10	2188	805	1383	230	56
230 SX 240/2	2388	805	1583	270	56
230 SX 240/3 DR 20	2568	985	1583	270	72
230 SX 240/3 DR 10	2619	985	1634	385	72
230 SX 240/3	2719	985	1734	415	72
230 SX 240/4 DR 20	2799	1165	1634	385	87
230 SX 240/4 DR 10	3019	1165	1854	444	87
230 SX 240/4	1165	1165	0	0	87
230 SX 240/5 DR 20	3199	1345	1854	444	103
230 SX 240/5 DR 10	1345	1345	0	0	103
230 SX 240/5	1345	1345	0	0	103
230 SX 240/6 DR 20	3509	1525	1984	480	118
230 SX 240/6 DR 10	1525	1525	0	0	118
230 SX 240/6	1525	1525	0	0	118

	Max	DR 10	DR 20
n% = Rendimento della pompa ***n% = Rendement de la pompe*** **n% = Pump efficiency** ***n% = Rendimiento de la bomba***	**79,3%**	**Max 79,5%**	**Max 79%**
kW/st = Assorbimento per stadio ***kW/st = Absorption par étage*** **kW/st = Stage absorption** ***kW/st = Potencia absorbida por etapa***	**47,6**	**Max 38,9**	**Max 31,1**

Tolleranza alla sabbia 50 g/m³ - Sand tolerance 50 g/m³ - Compatibilità con acqua potabile DM 174 Drinking water compatibility according to DM 174
Tolleranze secondo UNI ISO 9906 livello 3B - Tolerances according to UNI ISO 9906 grade 3B

PANELLI®

10" 230 SX240

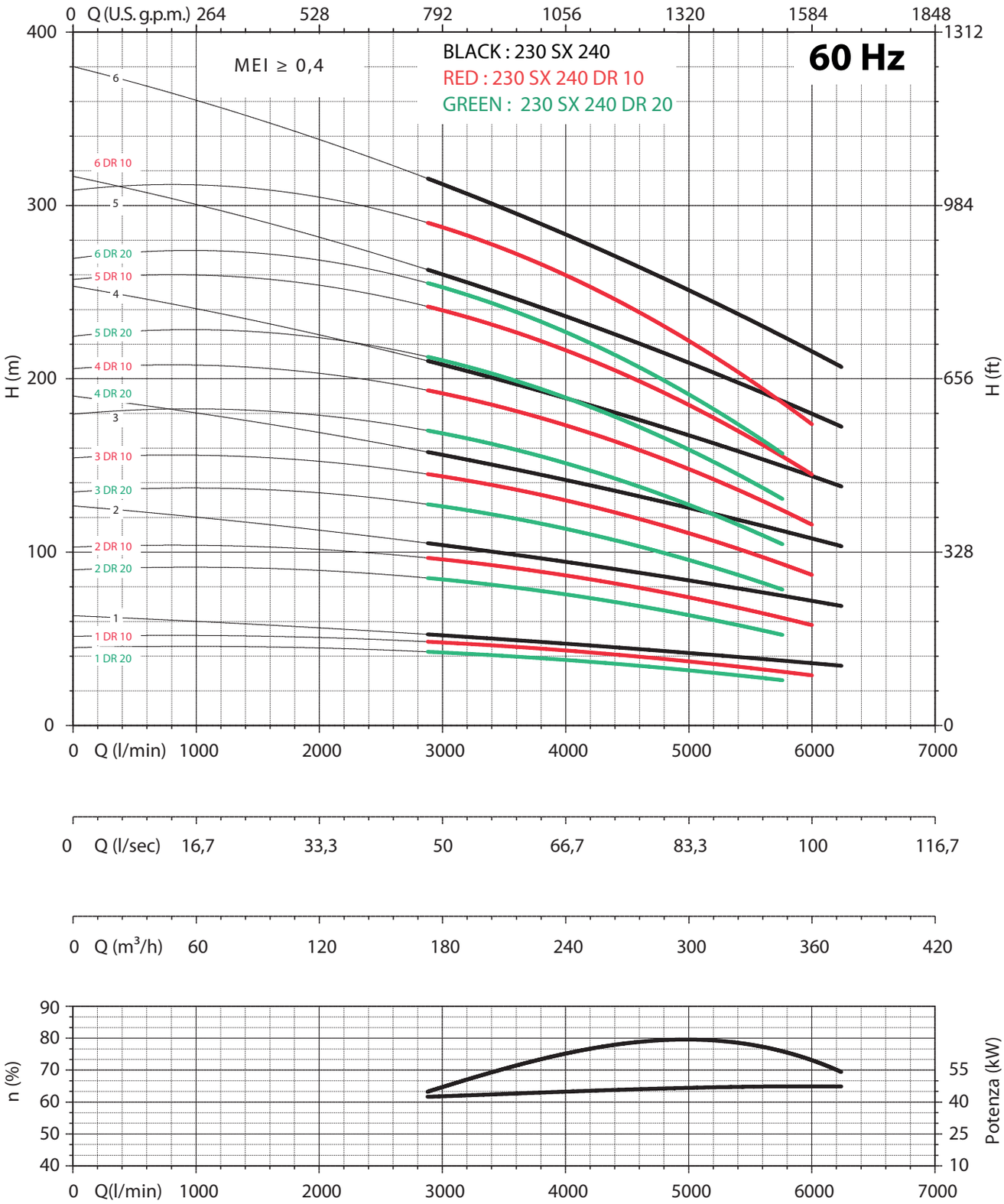

NPSH (m)	25%	50%	75%	100%
230 SX 240	3,4	5	7,8	11,8

acciaio inox microfuso - elevato rendimento - casted stainless steel - high efficiency

10" 230 SX280

PANELLI®

CARATTERISTICHE IDRAULICHE - HYDRAULIC PERFORMANCES

Q= Portata - Capacity - Debit **60 Hz n= 3450 min**

Tipo Type	Power kW	Power HP	l/min	0	3600	4080	4560	5040	5520	6000	6480	6960
			l/sec	0	60	68	76	84	92	100	108	116
			m³/h	0	216	244,8	273,5	302,3	331,1	359,9	388,7	417,5
230 SX 280/1 DR 20	44	60	H(m)	52	41	40	38	36	33	31	28	23
230 SX 280/1 DR 10	55	75		59	48	47	44	42	39	37	35	30
230 SX 280/1	66	90		65	54	53	50	48	46	43	41	36
230 SX 280/2 DR 20	92	125		104	83	80	75	71	66	61	56	47
230 SX 280/2 DR 10	110	150		118	96	93	89	85	79	74	69	60
230 SX 280/2	129	175		130	108	105	101	97	91	86	81	72
230 SX 280/3 DR 20	129	175		156	124	120	113	107	98	92	84	70
230 SX 280/3 DR 10	147	200		176	144	140	133	127	118	111	104	90
230 SX 280/3	185	250		194	162	158	151	145	137	130	122	108
230 SX 280/4 DR 20	185	250		209	166	160	151	143	131	122	112	93
230 SX 280/4 DR 10	220	300		235	192	187	177	169	158	149	138	120
230 SX 280/4	250	340		259	217	211	202	194	182	173	162	144
230 SX 280/5 DR 20	220	300		261	207	200	189	179	164	153	140	117
230 SX 280/5 DR 10	250	340		294	240	233	222	212	197	186	173	150
230 SX 280/5	300	400		324	271	264	252	242	228	216	203	180
230 SX 280/6 DR 20	300	400		313	249	240	226	214	197	183	168	140
230 SX 280/6 DR 10	300	400		353	289	280	266	254	237	223	207	180
230 SX 280/6	350	475		389	325	316	302	290	273	259	244	216

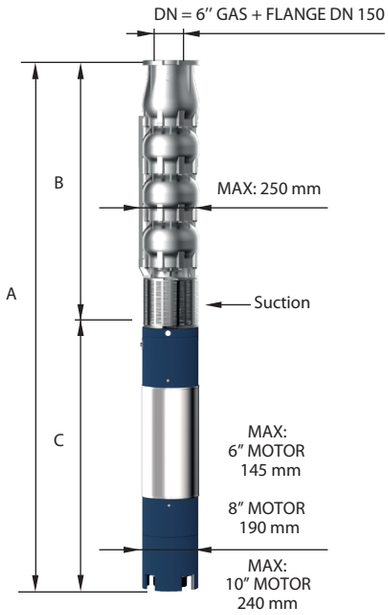

DIMENSIONI D'INGOMBRO E PESI - OVERALL DIMENSIONS AND WEIGHTS

Type	A mm Tri V 460	B mm	C mm Tri	M Kg Tri	P Kg
230 SX 280/1 DR 20	1748	625	1123	178	41
230 SX 280/1 DR 10	1858	625	1233	200	41
230 SX 280/1	1928	625	1303	214	41
230 SX 280/2 DR 20	2388	805	1583	270	56
230 SX 280/2 DR 10	2538	805	1733	300	56
230 SX 280/2	2439	805	1634	385	56
230 SX 280/3 DR 20	2619	985	1634	385	72
230 SX 280/3 DR 10	2719	985	1734	415	72
230 SX 280/3	2969	985	1984	480	72
230 SX 280/4 DR 20	3149	1165	1984	480	87
230 SX 280/4 DR 10	1165	1165	0	0	87
230 SX 280/4	1165	1165	0	0	87
230 SX 280/5 DR 20	1345	1345	0	0	103
230 SX 280/5 DR 10	1345	1345	0	0	103
230 SX 280/5	1345	1345	0	0	103
230 SX 280/6 DR 20	1525	1525	0	0	118
230 SX 280/6 DR 10	1525	1525	0	0	118
230 SX 280/6	1525	1525	0	0	118

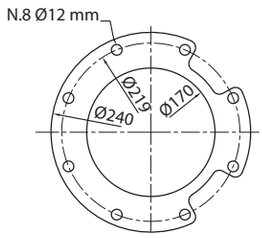

FOR COMMERCIAL TUBE
EXTERNAL DIAMETER: 168,3 mm

	Max	DR 10	DR 20
n% = Rendimento della pompa ***n% = Rendement de la pompe*** **n% = Pump efficiency** ***n% = Rendimiento de la bomba***	**76,5%**	**Max 77,2%**	**Max 76,1%**
kW/st = Assorbimento per stadio ***kW/st = Absorption par étage*** **kW/st = Stage absorption** ***kW/st = Potencia absorbida por etapa***	**57,1**	**Max 50,2**	**Max 43,3**

Tolleranza alla sabbia 50 g/m³ - Sand tolerance 50 g/m³ - Compatibilità con acqua potabile DM 174 Drinking water compatibility according to DM 174
Tolleranze secondo UNI ISO 9906 livello 3B - Tolerances according to UNI ISO 9906 grade 3B

PANELLI®

10" 230 SX280

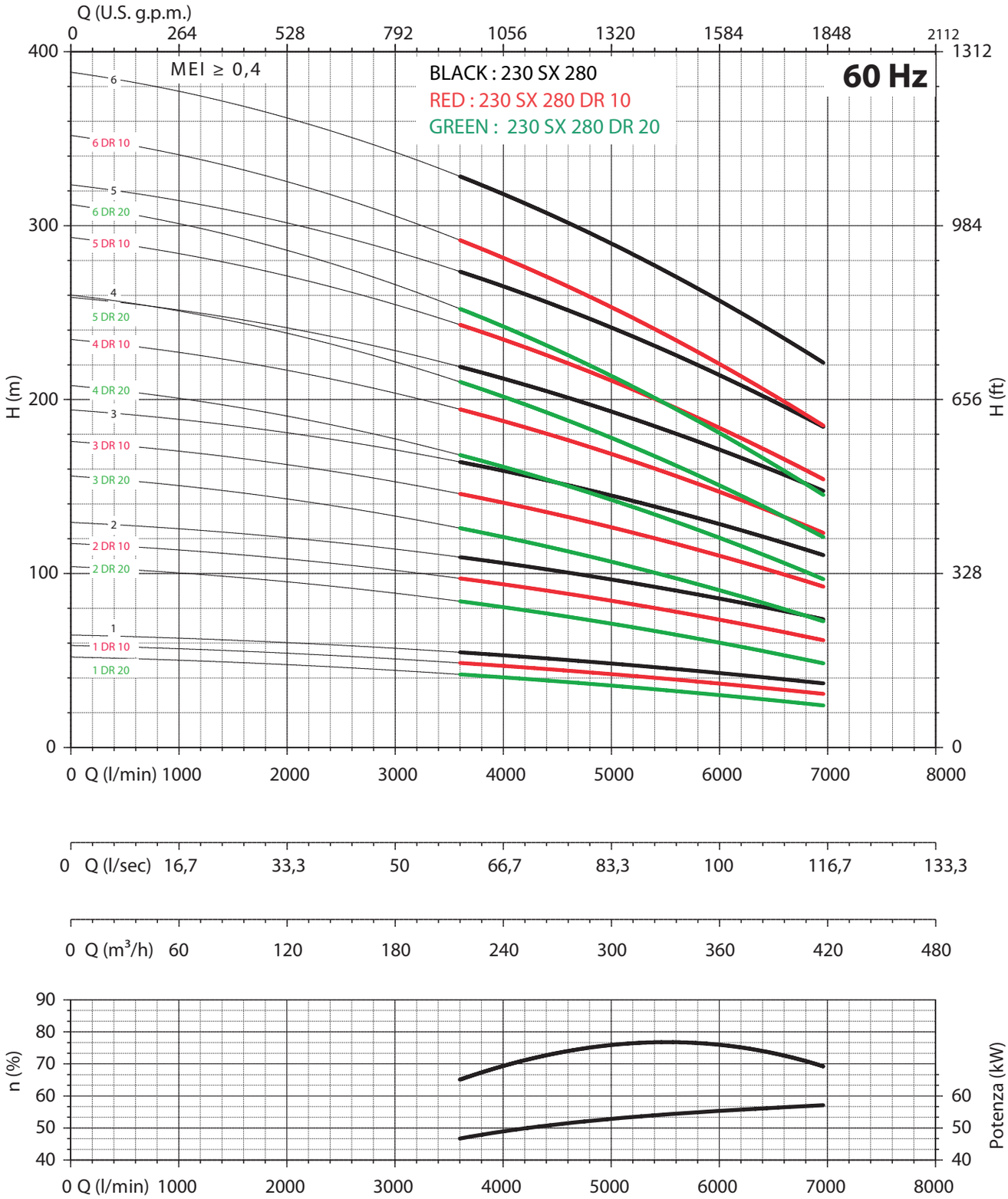

NPSH (m)	25%	50%	75%	100%
230 SX 280	3,4	5	7,8	11,8

12" 270 SX370

PANELLI®

CARATTERISTICHE IDRAULICHE - HYDRAULIC PERFORMANCES

Q= Portata - Capacity - Debit **60 Hz n= 3450 min**

Tipo Type	Power kW	Power HP	l/min	0	3600	4200	4800	5400	6000	6600	7200	7800	8400
			l/sec	0	60	70	80	90	100	110	120	130	140
			m³/h	0	216	252	288	324	360	396	432	468	504
270 SX 370/01 DR 35	66	90	H(m)	59	55	53	53	50	48	46	41	-	-
270 SX 370/01 DR 26	75	100		66	64	63	62	60	56	54	52	49	-
270 SX 370/01 DR 20	92	125		71	69	68	67	65	63	60	58	54	49
270 SX 370/01 DR 10	110	150		79	75	74	73	71	69	67	63	60	58
270 SX 370/01	110	150		89	81	79	79	76	75	74	72	67	60
270 SX 370/02 DR 35	129	175		118	109	107	105	101	95	91	82	-	-
270 SX 370/02 DR 26	165	225		132	128	127	124	121	112	108	104	98	-
270 SX 370/02 DR 20	185	250		141	137	135	134	130	126	121	115	108	98
270 SX 370/02 DR 10	220	300		158	150	149	146	143	138	134	127	121	115
270 SX 370/02	220	300		179	161	158	157	153	150	149	144	134	121

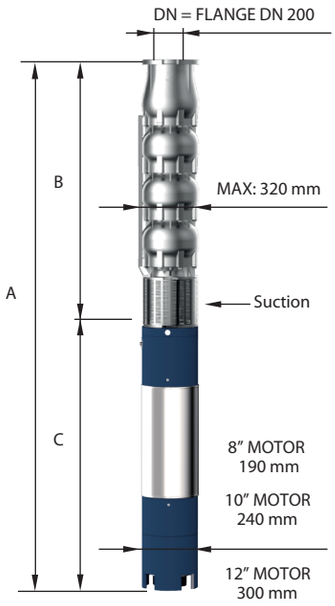

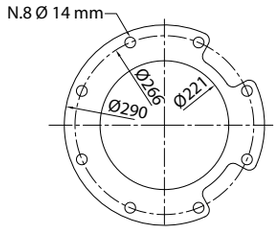

FOR COMMERCIAL TUBE
EXTERNAL DIAMETER: 219,1 mm

DIMENSIONI D'INGOMBRO E PESI - OVERALL DIMENSIONS AND WEIGHTS

Type	A mm Tri V 460	B mm	C mm Tri	M Kg Tri	P Kg
270 SX 370/01 DR 35	2073	770	1303	214	79
270 SX 370/01 DR 26	2153	770	1383	230	79
270 SX 370/01 DR 20	2353	770	1583	270	79
270 SX 370/01 DR 10	2503	770	1733	300	79
270 SX 370/01	2503	770	1733	300	79
270 SX 370/02 DR 35	2634	1000	1634	385	104
270 SX 370/02 DR 26	2854	1000	1854	444	104
270 SX 370/02 DR 20	2984	1000	1984	480	104
270 SX 370/02 DR 10	1000	1000	0	0	104
270 SX 370/02	1000	1000	0	0	104

	Max	DR 10	DR 20	DR 26	DR 35
n% = Rendimento della pompa ***n% = Rendement de la pompe*** **n% = Pump efficiency** ***n% = Rendimiento de la bomba***	**81%**	**Max 80,5%**	**Max 80%**	**Max 78,5%**	**Max 77,5%**
kW/st = Assorbimento per stadio ***kW/st = Absorption par étage*** **kW/st = Stage absorption** ***kW/st = Potencia absorbida por etapa***	**Max 111,1**	**Max 95,5**	**Max 85,6**	**Max 76,3**	**Max 63,7**

Tolleranza alla sabbia 50 g/m³ - Sand tolerance 50 g/m³ - Compatibilità con acqua potabile DM 174 Drinking water compatibility according to DM 174
Tolleranze secondo UNI ISO 9906 livello 3B - Tolerances according to UNI ISO 9906 grade 3B

PANELLI®

12" 270 SX370

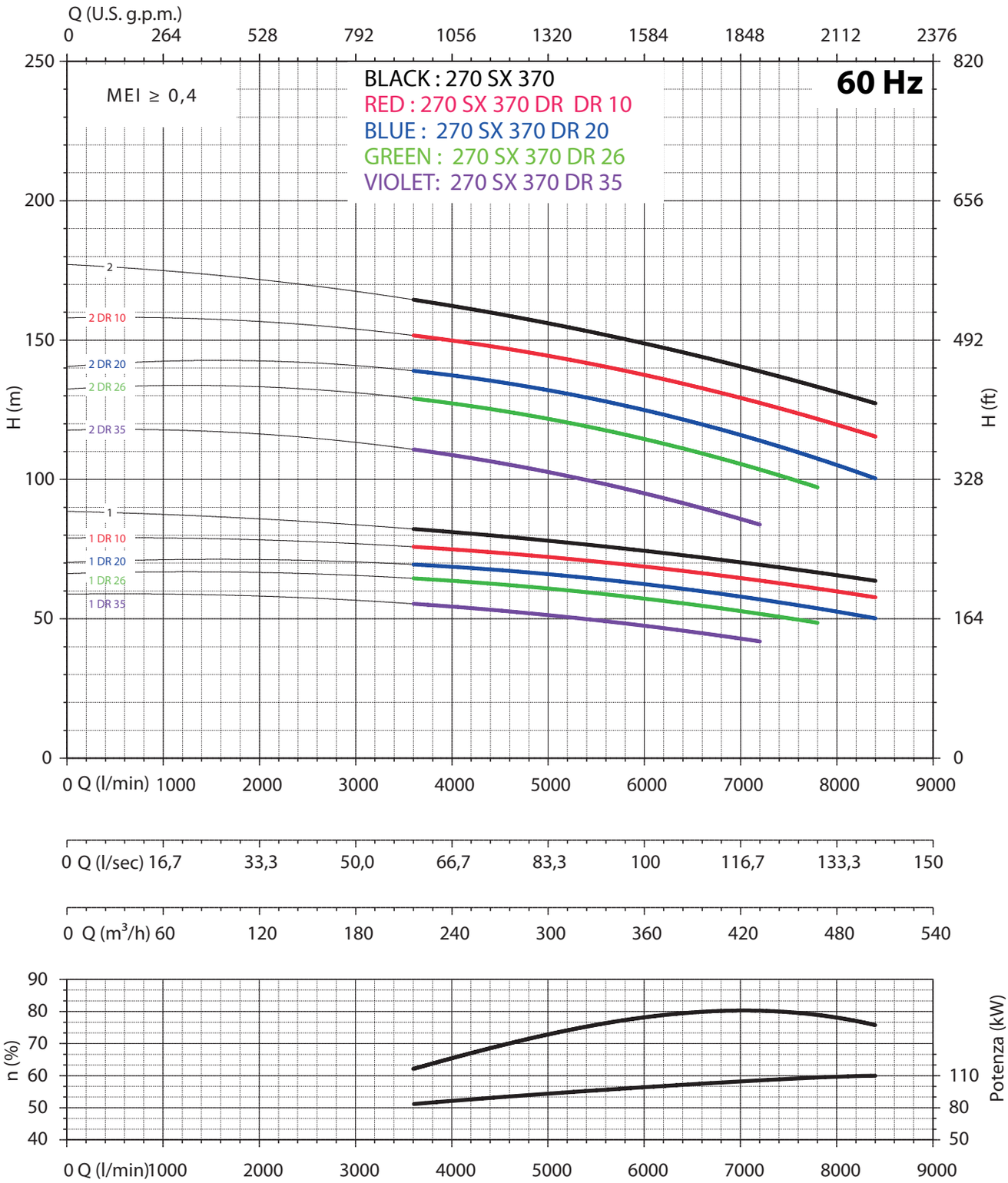

NPSH (m)	25%	50%	75%	100%
270 SX 370	3,4	5	7,8	11,8

12" 270 SX370

PANELLI®

CARATTERISTICHE IDRAULICHE - HYDRAULIC PERFORMANCES

Q= Portata - Capacity - Debit **60 Hz** **n= 3450 min**

Tipo Type	Power kW	Power HP	l/min	0	3600	4200	4800	5400	6000	6600	7200	7800	8400
			l/sec	0	60	70	80	90	100	110	120	130	140
			m³/h	0	216	252	288	324	360	396	432	468	504
270 SX 370/03 DR 35	220	300		177	164	160	158	151	143	137	124	-	-
270 SX 370/03 DR 26	250	340		199	193	190	186	181	168	162	156	147	-
270 SX 370/03 DR 20	300	400		212	206	203	201	194	188	181	173	162	147
270 SX 370/03 DR 10	300	400		238	225	223	219	214	207	201	190	181	173
270 SX 370/03	350	475	H(m)	268	242	238	236	229	225	223	216	201	181
270 SX 370/04 DR 35	300	400		236	219	213	211	202	190	182	165	-	-
270 SX 370/04 DR 26	350	475		265	257	253	248	242	225	217	207	196	-
270 SX 370/04 DR 20	350	475		282	274	271	268	259	251	242	230	217	196
270 SX 370/04 DR 10	400	545		317	300	297	291	286	276	268	253	242	230

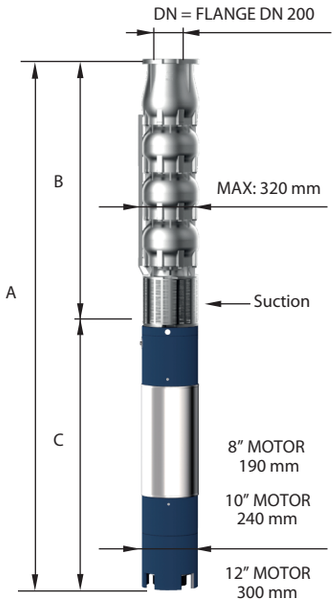

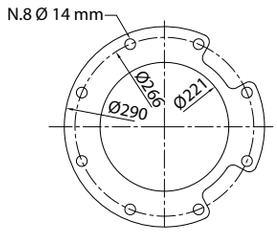

FOR COMMERCIAL TUBE
EXTERNAL DIAMETER: 219,1 mm

DIMENSIONI D'INGOMBRO E PESI - OVERALL DIMENSIONS AND WEIGHTS

Type	A mm Tri V 460	B mm	C mm Tri	M Kg Tri	P Kg
270 SX 370/03 DR 35	1230	1230	0	0	129
270 SX 370/03 DR 26	1230	1230	0	0	129
270 SX 370/03 DR 20	1230	1230	0	0	129
270 SX 370/03 DR 10	1230	1230	0	0	129
270 SX 370/03	1230	1230	0	0	129
270 SX 370/04 DR 35	1460	1460	0	0	154
270 SX 370/04 DR 26	1460	1460	0	0	154
270 SX 370/04 DR 20	1460	1460	0	0	154
270 SX 370/04 DR 10	1460	1460	0	0	154

	Max	DR 10	DR 20	DR 26	DR 35
n% = Rendimento della pompa *n% = Rendement de la pompe* n% = Pump efficiency *n% = Rendimiento de la bomba*	**81%**	**Max 80,5%**	**Max 80%**	**Max 78,5%**	**Max 77,5%**
kW/st = Assorbimento per stadio *kW/st = Absorption par étage* kW/st = Stage absorption *kW/st = Potencia absorbida por etapa*	**111,1**	**Max 95,5**	**Max 85,6**	**Max 76,3**	**Max 63,7**

Tolleranza alla sabbia 50 g/m³ - Sand tolerance 50 g/m³ - Compatibilità con acqua potabile DM 174 Drinking water compatibility according to DM 174
Tolleranze secondo UNI ISO 9906 livello 3B - Tolerances according to UNI ISO 9906 grade 3B

PANELLI® 12" 270 SX370

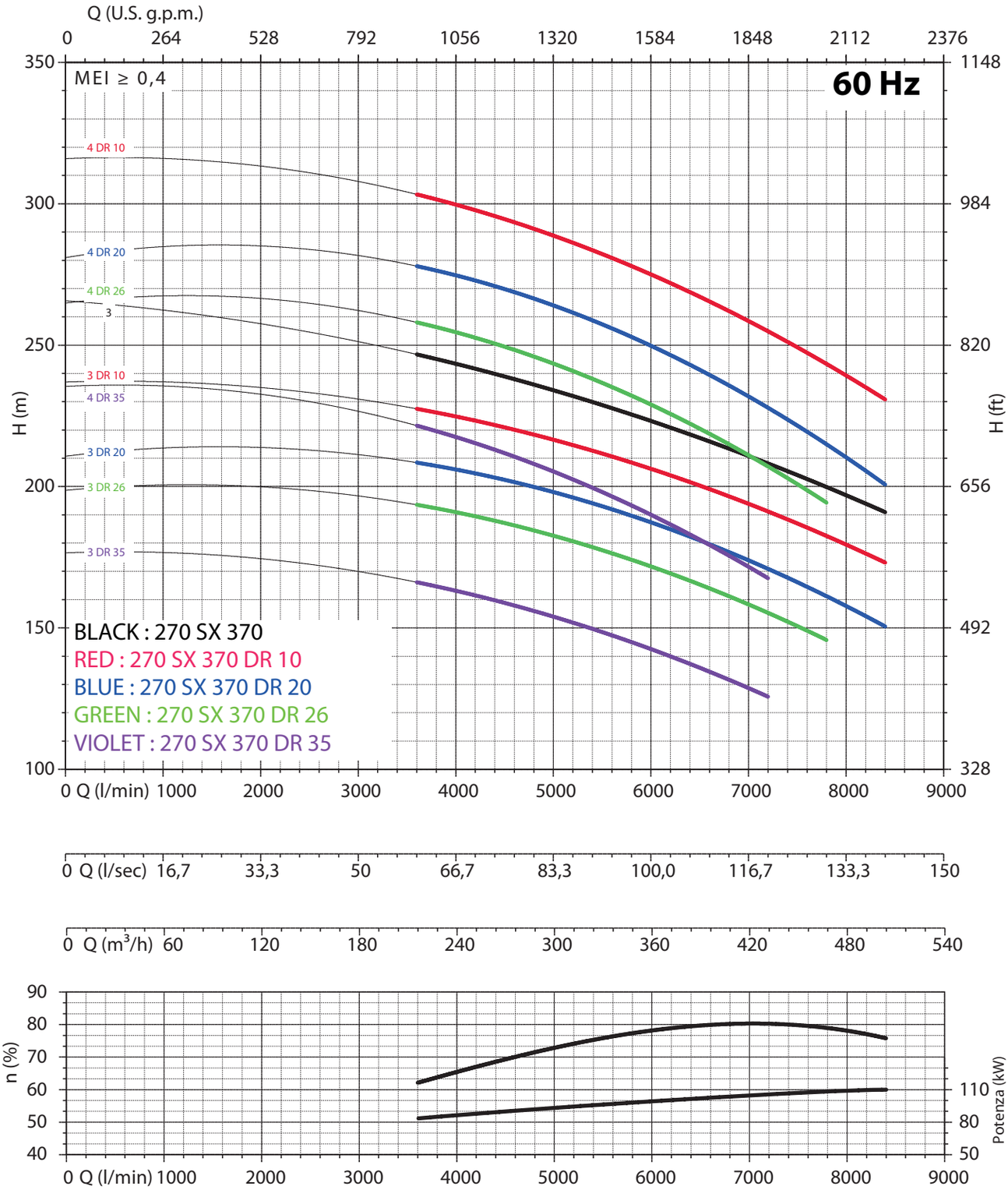

NPSH (m)	25%	50%	75%	100%
270 SX 370	3,4	5	7,8	11,8

acciaio inox microfuso - elevato rendimento - casted stainless steel - high efficiency

12" 270 SX440

PANELLI®

CARATTERISTICHE IDRAULICHE - HYDRAULIC PERFORMANCES

Q= Portata - Capacity - Debit **60 Hz n= 3450 min**

Tipo Type	Power kW	Power HP	l/min	0	4800	5400	6000	6600	7200	7800	8400	9000	9600	10200	10800
			l/sec	0	80	90	100	110	120	130	140	150	160	170	180
			m³/h	0	287,9	323,9	359,9	395,9	431,9	467,9	503,9	539,9	575,9	611,9	647,9
270 SX 440/1 DR 30	66	90	H(m)	62	56	54	52	49	46	43	39	35	-	-	-
270 SX 440/1 DR 20	92	125		68	63	62	59	56	53	50	47	43	37	32	-
270 SX 440/1 DR 10	92	125		76	72	69	66	63	60	58	55	51	46	40	-
270 SX 440/1	110	150		84	78	75	72	69	66	63	60	58	53	45	39
270 SX 440 A/1	129	175		88	82	78	76	75	72	69	66	64	59	56	46
270 SX 440/2 DR 30	129	175		124	112	108	104	98	92	85	78	69	-	-	-
270 SX 440/2 DR 20	165	225		135	127	124	118	111	105	100	94	85	75	63	-
270 SX 440/2 DR 10	185	250		153	144	138	132	127	121	115	109	103	92	81	-
270 SX 440/2	220	300		167	156	150	144	138	132	127	121	115	105	89	78
270 SX 440 A/2	250	340		176	164	156	153	150	144	138	132	128	118	112	92

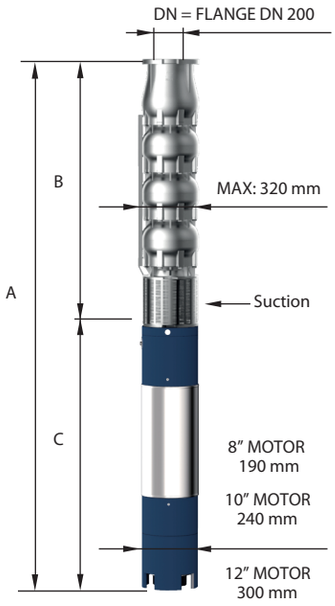

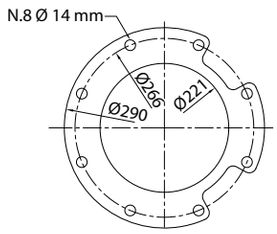

FOR COMMERCIAL TUBE
EXTERNAL DIAMETER: 219,1 mm

DIMENSIONI D'INGOMBRO E PESI - OVERALL DIMENSIONS AND WEIGHTS

Type	A mm Tri V 460	B mm	C mm Tri	M Kg Tri	P Kg
270 SX 440/1 DR 30	2073	770	1303	214	79
270 SX 440/1 DR 20	2353	770	1583	270	79
270 SX 440/1 DR 10	2353	770	1583	270	79
270 SX 440/1	2503	770	1733	300	79
270 SX 440 A/1	2404	770	1634	385	79
270 SX 440/2 DR 30	2634	1000	1634	385	104
270 SX 440/2 DR 20	2854	1000	1854	444	104
270 SX 440/2 DR 10	2984	1000	1984	480	104
270 SX 440/2	1000	1000	0	0	104
270 SX 440 A/2	1000	1000	0	0	104

n% = Rendimento della pompa
n% = Rendement de la pompe
n% = Pump efficiency
n% = Rendimiento de la bomba

440 A	440	440 DR 10	440 DR 20	440 DR 30
Max 82,5%	**Max 81,6%**	**Max 82,7%**	**Max 81,8%**	**Max 81,2%**

kW/st = Assorbimento per stadio
kW/st = Absorption par étage
kW/st = Stage absorption
kW/st = Potencia absorbida por etapa

440 A	440	440 DR 10	440 DR 20	440 DR 30
Max 115,9	**Max 104,5**	**Max 91,7**	**Max 78,9**	**Max 64**

Tolleranza alla sabbia 50 g/m³ - Sand tolerance 50 g/m³ - Compatibilità con acqua potabile DM 174 Drinking water compatibility according to DM 174
Tolleranze secondo UNI ISO 9906 livello 3B - Tolerances according to UNI ISO 9906 grade 3B

PANELLI®

12" 270 SX440

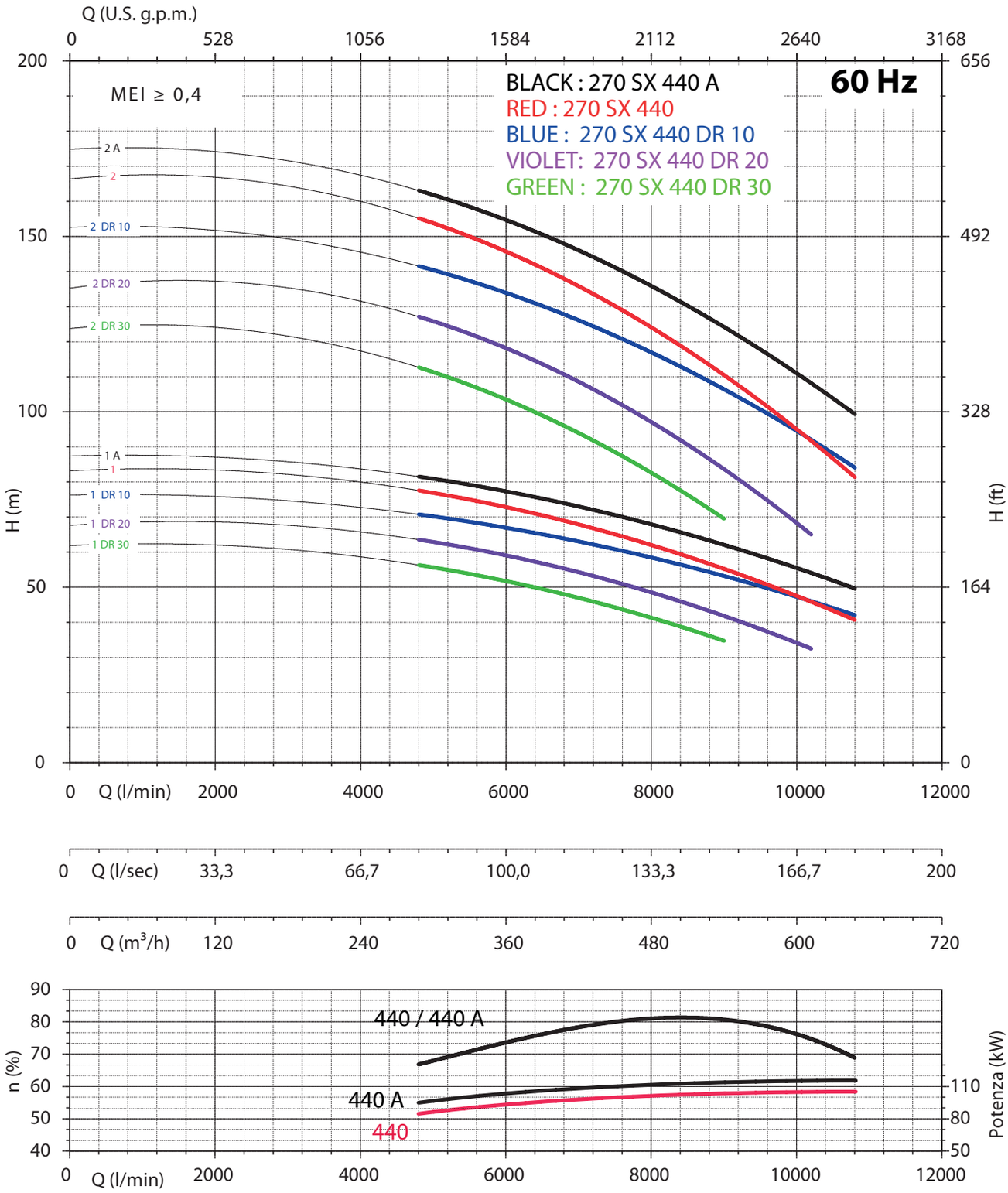

NPSH (m)	25%	50%	75%	100%
270 SX 440	3,4	5	7,8	11,8

12" 270 SX440

PANELLI®

CARATTERISTICHE IDRAULICHE - HYDRAULIC PERFORMANCES

Q= Portata - Capacity - Debit **60 Hz n= 3450 min**

Tipo Type	Power kW	Power HP	l/min	0	4800	5400	6000	6600	7200	7800	8400	9000	9600	10200	10800
			l/sec	0	80	90	100	110	120	130	140	150	160	170	180
			m³/h	0	288	324	360	396	432	468	504	540	576	612	648
270 SX 440/3 DR 30	220	300	H(m)	186	168	162	156	147	138	128	117	104	-	-	-
270 SX 440/3 DR 20	250	340		203	190	186	177	167	158	149	141	128	112	95	-
270 SX 440/3 DR 10	300	400		229	216	207	199	190	181	173	164	154	138	121	-
270 SX 440/3	350	475		251	233	225	216	207	199	190	181	173	158	134	117
270 SX 440 A/3	350	475		264	246	233	229	225	216	207	199	193	177	168	138
270 SX 440/4 DR 30	300	400		248	225	217	207	196	184	170	156	138	-	-	-
270 SX 440/4 DR 20	350	475		271	253	248	236	222	211	199	188	170	150	127	-
270 SX 440/4 DR 10	400	545		305	288	276	265	253	242	230	219	205	184	161	-

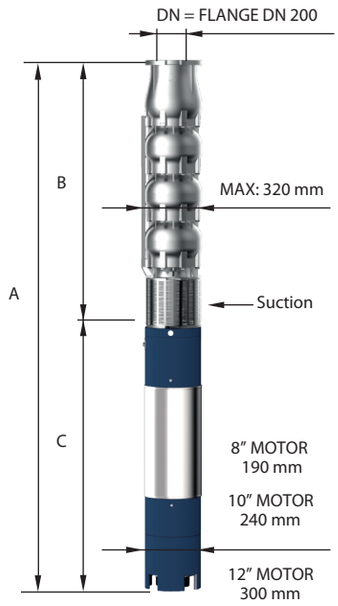

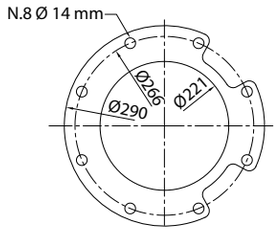

FOR COMMERCIAL TUBE
EXTERNAL DIAMETER: 219,1 mm

DIMENSIONI D'INGOMBRO E PESI - OVERALL DIMENSIONS AND WEIGHTS

Type	A mm Tri V 460	B mm	C mm Tri	M Kg Tri	P Kg
270 SX 440/3 DR 30	1230	1230	0	0	129
270 SX 440/3 DR 20	1230	1230	0	0	129
270 SX 440/3 DR 10	1230	1230	0	0	129
270 SX 440/3	1230	1230	0	0	129
270 SX 440 A/3	1230	1230	0	0	129
270 SX 440/4 DR 30	1460	1460	0	0	154
270 SX 440/4 DR 20	1460	1460	0	0	154
270 SX 440/4 DR 10	1460	1460	0	0	154

n% = Rendimento della pompa
n% = Rendement de la pompe
n% = Pump efficiency
n% = Rendimiento de la bomba

440 A	440	440 DR 10	440 DR 20	440 DR 30
Max 82,5%	**Max 81,6%**	**Max 82,7%**	**Max 81,8%**	**Max 81,2%**

kW/st = Assorbimento per stadio
kW/st = Absorption par étage
kW/st = Stage absorption
kW/st = Potencia absorbida por etapa

440 A	440	440 DR 10	440 DR 20	440 DR 30
Max 115,9	**Max 104,5**	**Max 91,7**	**Max 78,9**	**Max 64**

Tolleranza alla sabbia 50 g/m³ - Sand tolerance 50 g/m³ - Compatibilità con acqua potabile DM 174 Drinking water compatibility according to DM 174
Tolleranze secondo UNI ISO 9906 livello 3B - Tolerances according to UNI ISO 9906 grade 3B

PANELLI®

12" 270 SX440

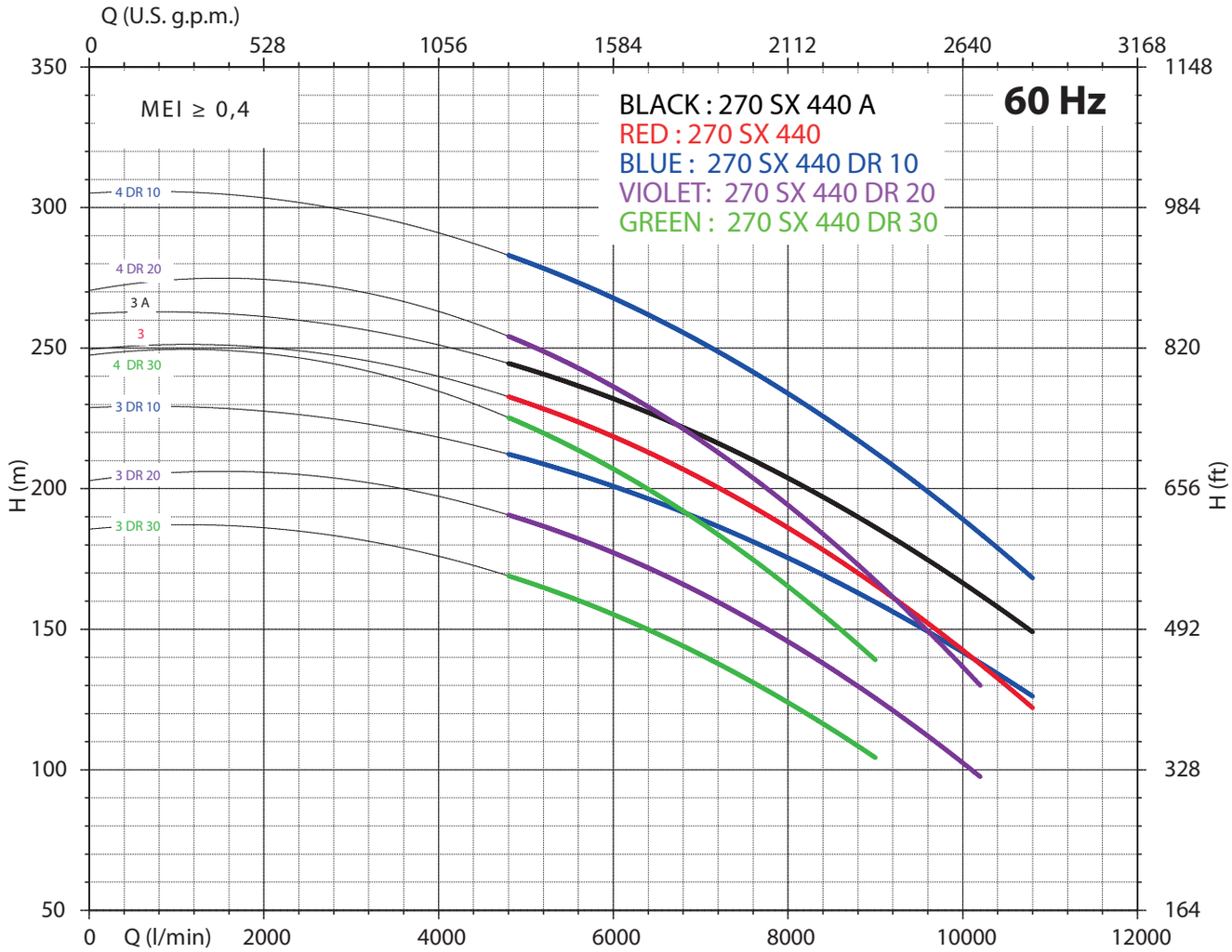

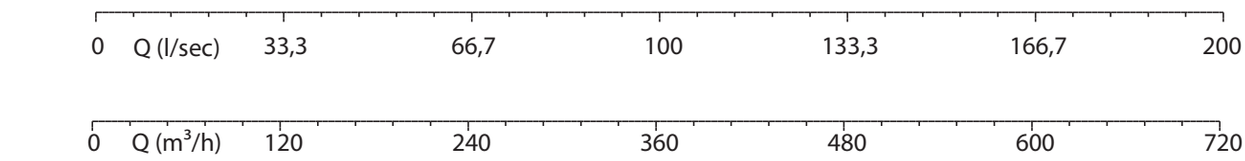

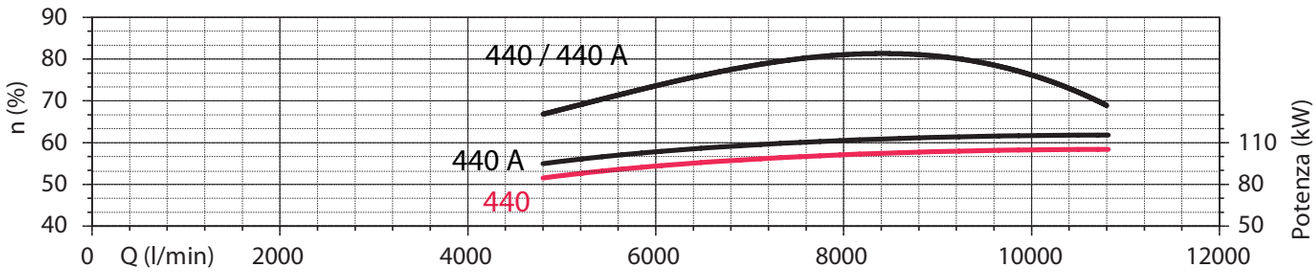

NPSH (m)	25%	50%	75%	100%
270 SX 440	3,4	5	7,8	11,8

PANELLI®

italian excellence since 1906

10" 230 SX | 60Hz

POMPA SOMMERSA SEMIASSIALE - INOX
SEMIAXIAL SUBMERSIBLE PUMP - INOX

Casted

POMPA 10" ACCOPPIATA A MOTORE 6"
10'' PUMP COUPLING WITH 6'' MOTORS
CONNECTION FLANGE

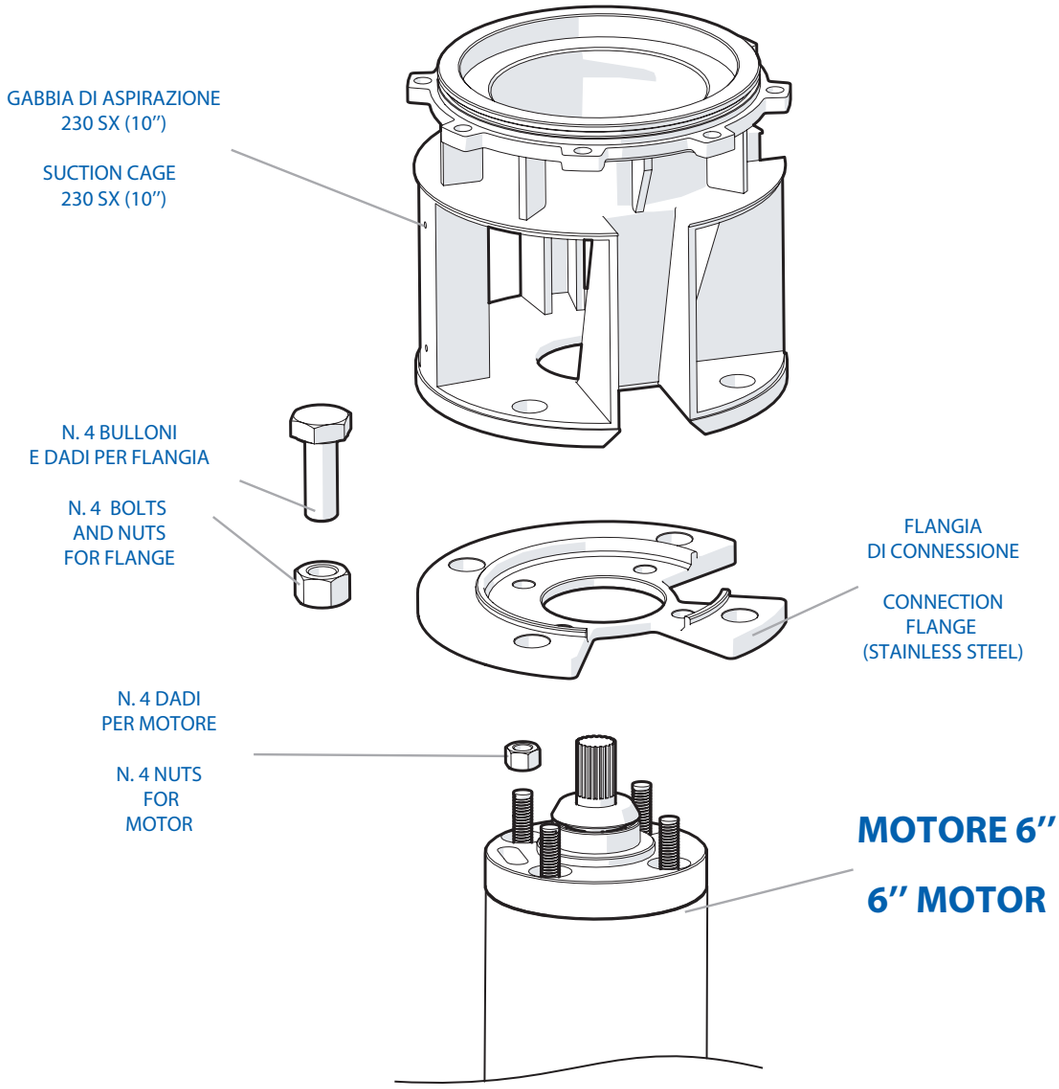

italian excellence since 1906

6" 8" 10" 12"

140 SX
180 SX
230 SX
270 SX

60Hz

POMPA SOMMERSA SEMIASSIALE INOX
SEMIAXIAL SUBMERSIBLE PUMP - INOX

Casted

RICAMBI
TABELLE MATERIALI

SPARE PARTS
MATERIAL CHARTS

6" 8" 10" 12"

140 - 180 - 230 - 270 SX

PANELLI®

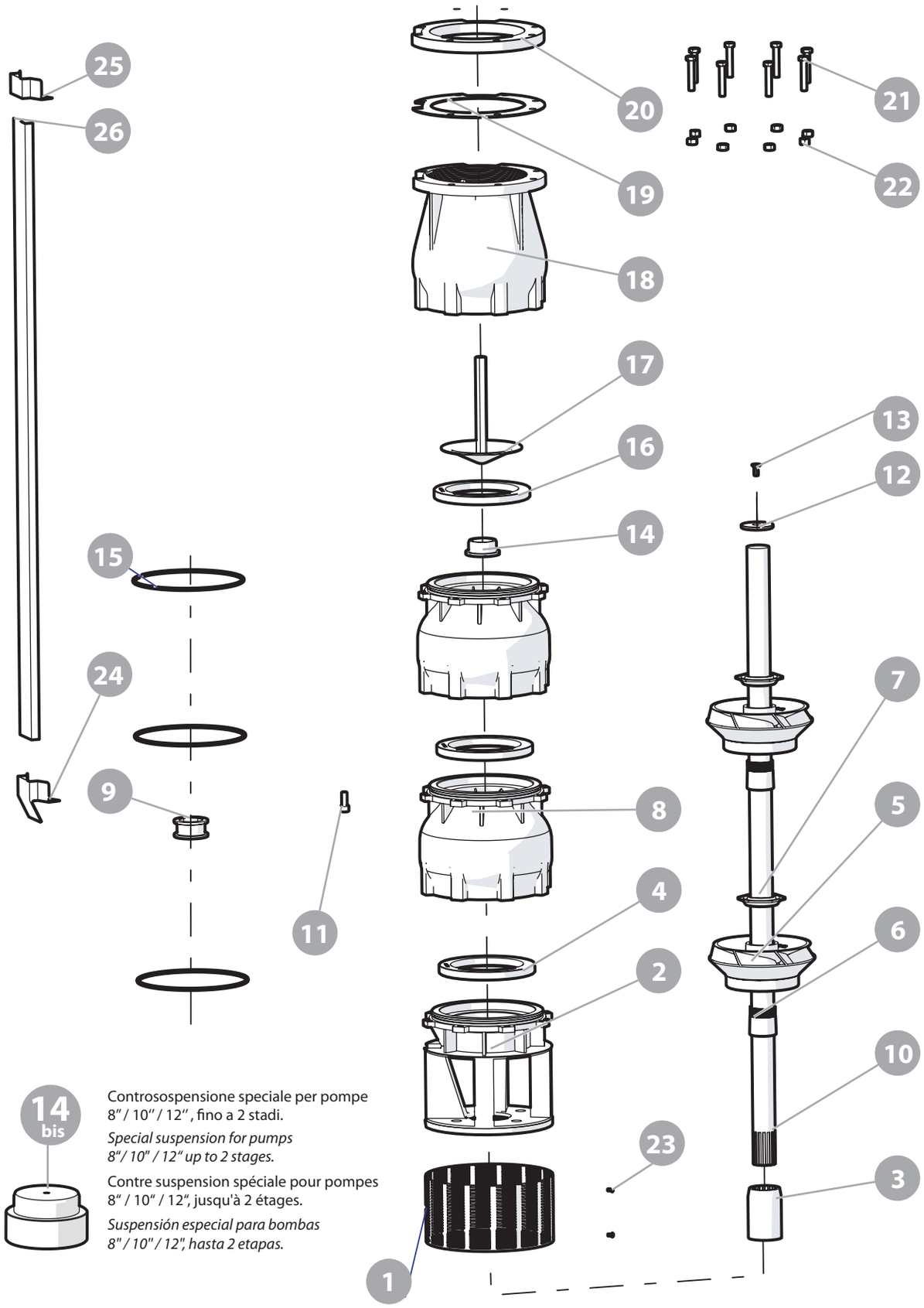

Controsospensione speciale per pompe 8" / 10" / 12", fino a 2 stadi.

Special suspension for pumps 8"/ 10" / 12" up to 2 stages.

Contre suspension spéciale pour pompes 8" / 10" / 12", jusqu'à 2 étages.

Suspensión especial para bombas 8" / 10" / 12", hasta 2 etapas.

PANELLI®

6" 8" 10" 12"

140 - 180 - 230 - 270 SX

140 - 180 - 230 - 270 SX

N. CODE	DESCRIZIONE (italiano)	MATERIALE (italiano)	DESCRIZIONE (english)	MATERIAL (english)
1	SUCCHERUOLA	ACCIAIO INOX AISI 304	SUCTION STRAINER	AISI 304
2	GABBIA DI ASPIRAZIONE	ACCIAIO INOX AISI 304	SUCTION CAGE	AISI 304
3	GIUNTO	ACCIAIO INOX AISI 304	JOINT	AISI 304
4	ANELLO USURA	GOMMA	USURY RING	NBR
5	GIRANTE	ACCIAIO INOX AISI 304	IMPELLER	AISI 304
6	CONO	ACCIAIO INOX AISI 304	CONE	AISI 304
7	GHIERA	ACCIAIO INOX AISI 304	HEXAGONAL RING	AISI 304
8	DIFFUSORE	ACCIAIO INOX AISI 304	DIFFUSEUR	AISI 304
9	BRONZINA	GOMMA	BEARING BUSH	NBR
10	ALBERO POMPA	ACCIAIO INOX AISI 304	PUMP SHAFT	AISI 304
11	N. 8 VITI PER DIFFUSORE	ACCIAIO INOX AISI 304	N. 8 SCREWS FOR DIFFUSEUR	AISI 304
12	DISCO ACCIAIO	ACCIAIO INOX AISI 304	RING	AISI 304
13	VITE DISCO ACCIAIO	ACCIAIO INOX AISI 304	SCREW FOR DISK	AISI 304
14	CONTROSOSPENSIONE	PTFE + 25 CARBONE	COUNTERTHRUST	PTFE + 25 CARBON
15	O-RING	GOMMA	O-RING	NBR
16	GUARNIZIONE FARFALLA	GOMMA	GASKET VALVE	NBR
17	FARFALLA	ACCIAIO INOX AISI 304	CAP VALVE	AISI 304
18	CORPO VALVOLA	ACCIAIO INOX AISI 304	BODY VALVE	AISI 304
19	GUARNIZIONE CONTROFLANGIA	GOMMA	SEAL COUNTERFLANGE	NBR
20	CONTROFLANGIA	ACCIAIO INOX AISI 304	COUNTERFLANGE	AISI 304
21	N. 8 VITI PER CONTROFLANGIA	ACCIAIO INOX AISI 304	N. 8 SCREWS FOR COUNTERFLANGE	AISI 304
22	N. 8 DADI PER CONTROFLANFIA	ACCIAIO INOX AISI 304	N. 8 NUTS FOR COUNTERFLANGE	AISI 304
23	N. 2 VITI PER SUCCHERUOLA	ACCIAIO INOX AISI 304	N. 2 SCREWS FOR SUCTION STRAINER	AISI 304
24	STAFFETTA INFERIORE	ACCIAIO INOX AISI 304	LOWER FLANGE	AISI 304
25	STAFFETTA SUPERIORE	ACCIAIO INOX AISI 304	UPPER FLANGE	AISI 304
26	COPRICAVO	ACCIAIO INOX AISI 304	COVER CABLE	AISI 304

N. CODE	DESCRIPTION (Français)	MATÉRIEL (Français)	DESCRIPCIÓN (español)	MATERIAL (español)
1	CREPINE	ACIER INOXYDABLE AISI 304	REJILLA	ACERO INOXIDABLE AISI 304
2	CAGE D'ASPIRATION	ACIER INOXYDABLE AISI 304	CUERPO DE ASPIRACION	ACERO INOXIDABLE AISI 304
3	JOINT	ACIER INOXYDABLE AISI 304	ACOPLAMIENTO	ACERO INOXIDABLE AISI 304
4	BAGUE D'USURE	CAOUTCHOUC	ANILLO DE DESGASTE	GOMA
5	ROUE	ACIER INOXYDABLE AISI 304	IMPULSOR	ACERO INOXIDABLE AISI 304
6	CONE	ACIER INOXYDABLE AISI 304	CONO	ACERO INOXIDABLE AISI 304
7	BAGUE	ACIER INOXYDABLE AISI 304	ANILLO HEXAGONAL	ACERO INOXIDABLE AISI 304
8	DIFFUSEUR	ACIER INOXYDABLE AISI 304	DIFUSOR	ACERO INOXIDABLE AISI 304
9	COUSSINET	CAOUTCHOUC	COJINETE	GOMA
10	ABRE POMPE	ACIER INOXYDABLE AISI 304	EJE DE BOMBA	ACERO INOXIDABLE AISI 304
11	N. 8 VIS POUR DIFFUSEUR	ACIER INOXYDABLE AISI 304	N. 8 TORNILLOS DIFUSOR	ACERO INOXIDABLE AISI 304
12	RING	ACIER INOXYDABLE AISI 304	ANILLO EN ACERO	ACERO INOXIDABLE AISI 304
13	VIS RING	ACIER INOXYDABLE AISI 304	TORNILLO POR ANILLO EN ACERO	ACERO INOXIDABLE AISI 304
14	CONTRESUSPENSION	PTFE + 25% GRAPHITE	CONTRA-SUSPENCION	PTFE + 25% GRAPHITE
15	O-RING	CAOUTCHOUC	ANILLO TORICO	GOMA
16	GASKET VALVE	CAOUTCHOUC	JUNTA DE VALVULA	GOMA
17	PLAT	ACIER INOXYDABLE AISI 304	VALVULA	ACERO INOXIDABLE AISI 304
18	CORPS DE VALVE	ACIER INOXYDABLE AISI 304	CUERPO DE IMPULSION	ACERO INOXIDABLE AISI 304
19	JOINT ETANCHEITE CONTREBRIDE	CAOUTCHOUC	JUNTA CONTRE-BRIDA	GOMA
20	CONTREBRIDE	ACIER INOXYDABLE AISI 304	CONTRE-BRIDA	ACERO INOXIDABLE AISI 304
21	N. 8 VIS POUR CONTREBRIDE	ACIER INOXYDABLE AISI 304	N. 8 TORNILLOS CONTRE-BRIDA	ACERO INOXIDABLE AISI 304
22	N. 8 ECROU POUR CONTREBRIDE	ACIER INOXYDABLE AISI 304	N. 8 TUERCAS CONTRE-BRIDA	ACERO INOXIDABLE AISI 304
23	N.2 VIS POUR CREPINE	ACIER INOXYDABLE AISI 304	N. 2 TORNILLOS REJILLA	ACERO INOXIDABLE AISI 304
24	BRIDE INFERIEURE	ACIER INOXYDABLE AISI 304	GRAPA INFERIOR	ACERO INOXIDABLE AISI 304
25	BRIDE SUPERIEURE	ACIER INOXYDABLE AISI 304	GRAPA SUPERIOR	ACERO INOXIDABLE AISI 304
26	PROTECTOR CABLE	ACIER INOXYDABLE AISI 304	PARACABLE	ACERO INOXIDABLE AISI 304

14 BIS

CONTROSOSPENSIONE SPECIALE PER POMPE 8" / 10" / 12", FINO A 2 STADI	PTFE +25 CARBONE
SPECIAL SUSPENSION FOR PUMPS 8" / 10" / 12", UP TO 2 STAGES	*PTFE + 25 CARBON*
CONTRE SUSPENSION SPÉCIALE POUR POMPES 8" / 10" / 12", JUSQU'À 2 ÉTAGES	PTFE + 25% GRAPHITE
SUSPENSIÓN ESPECIAL PARA BOMBAS 8" / 10" / 12", HASTA 2 ETAPAS	*PTFE + 25% GRAPHITE*

6" 8" 10" 12"

140 - 180 - 230 - 270 SX

PANELLI®

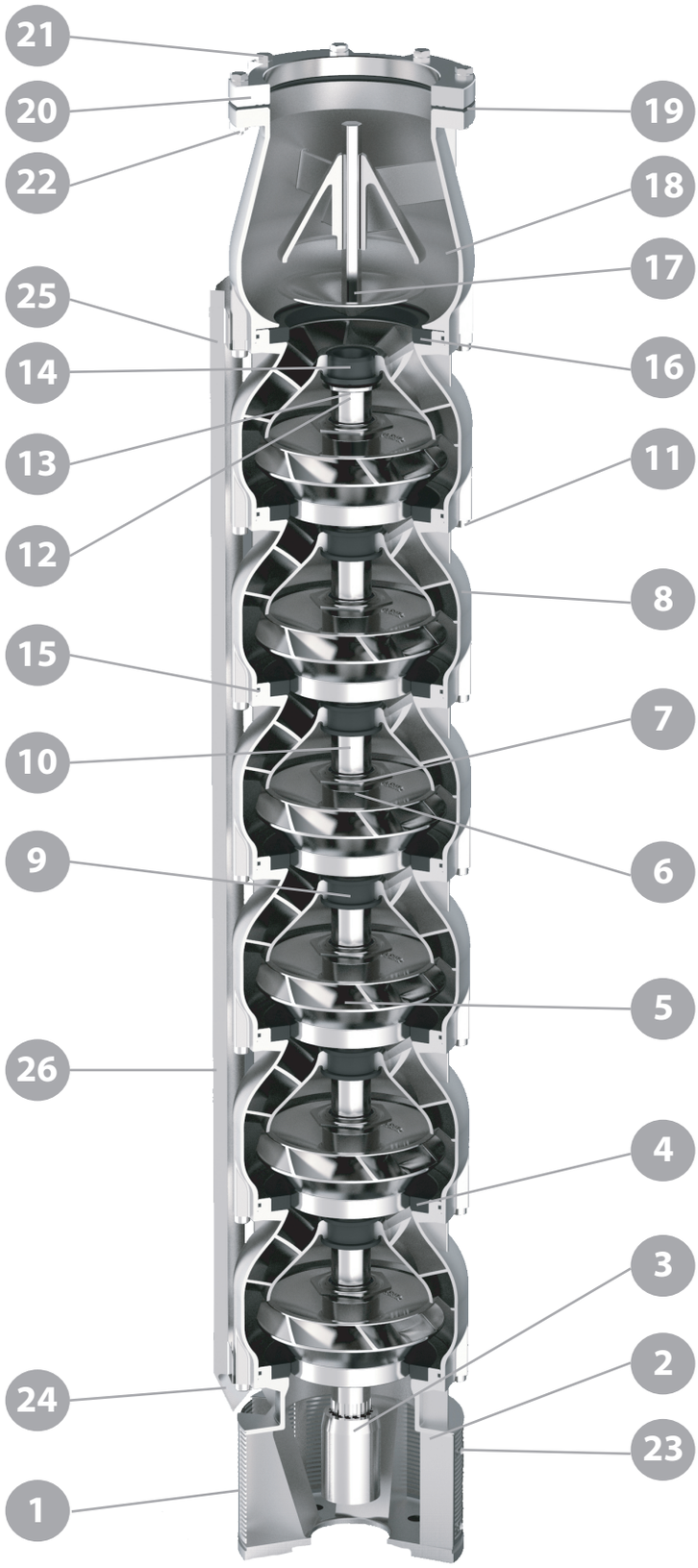

Controsospensione speciale per pompe
8" / 10'' / 12'', fino a 2 stadi.

Special suspension for pumps
8 " / 10 "/ 12", up to 2 stages.

Contre suspension spéciale pour pompes
8" / 10'' / 12'', jusqu'à 2 étages.

Suspensión especial para bombas
8" / 10"/ 12'' , hasta 2 etapas.

PANELLI®

6" 8" 10" 12"

140 - 180 - 230 - 270 SX

140 - 180 - 230 - 270 SX

N. CODE	DESCRIZIONE (italiano)	MATERIALE (italiano)	DESCRIZIONE (english)	MATERIAL (english)
1	SUCCHERUOLA	ACCIAIO INOX AISI 304	SUCTION STRAINER	AISI 304
2	GABBIA DI ASPIRAZIONE	ACCIAIO INOX AISI 304	SUCTION CAGE	AISI 304
3	GIUNTO	ACCIAIO INOX AISI 304	JOINT	AISI 304
4	ANELLO USURA	GOMMA	USURY RING	NBR
5	GIRANTE	ACCIAIO INOX AISI 304	IMPELLER	AISI 304
6	CONO	ACCIAIO INOX AISI 304	CONE	AISI 304
7	GHIERA	ACCIAIO INOX AISI 304	HEXAGONAL RING	AISI 304
8	DIFFUSORE	ACCIAIO INOX AISI 304	DIFFUSEUR	AISI 304
9	BRONZINA	GOMMA	BEARING BUSH	NBR
10	ALBERO POMPA	ACCIAIO INOX AISI 304	PUMP SHAFT	AISI 304
11	N. 8 VITI PER DIFFUSORE	ACCIAIO INOX AISI 304	N. 8 SCREWS FOR DIFFUSEUR	AISI 304
12	DISCO ACCIAIO	ACCIAIO INOX AISI 304	RING	AISI 304
13	VITE DISCO ACCIAIO	ACCIAIO INOX AISI 304	SCREW FOR DISK	AISI 304
14	CONTROSOSPENSIONE	PTFE + 25 CARBONE	COUNTERTHRUST	PTFE + 25 CARBON
15	O-RING	GOMMA	O-RING	NBR
16	GUARNIZIONE FARFALLA	GOMMA	GASKET VALVE	NBR
17	FARFALLA	ACCIAIO INOX AISI 304	CAP VALVE	AISI 304
18	CORPO VALVOLA	ACCIAIO INOX AISI 304	BODY VALVE	AISI 304
19	GUARNIZIONE CONTROFLANGIA	GOMMA	SEAL COUNTERFLANGE	NBR
20	CONTROFLANGIA	ACCIAIO INOX AISI 304	COUNTERFLANGE	AISI 304
21	N. 8 VITI PER CONTROFLANGIA	ACCIAIO INOX AISI 304	N. 8 SCREWS FOR COUNTERFLANGE	AISI 304
22	N. 8 DADI PER CONTROFLANFIA	ACCIAIO INOX AISI 304	N. 8 NUTS FOR COUNTERFLANGE	AISI 304
23	N. 2 VITI PER SUCCHERUOLA	ACCIAIO INOX AISI 304	N. 2 SCREWS FOR SUCTION STRAINER	AISI 304
24	STAFFETTA INFERIORE	ACCIAIO INOX AISI 304	LOWER FLANGE	AISI 304
25	STAFFETTA SUPERIORE	ACCIAIO INOX AISI 304	UPPER FLANGE	AISI 304
26	COPRICAVO	ACCIAIO INOX AISI 304	COVER CABLE	AISI 304

N. CODE	DESCRIPTION (Français)	MATÉRIEL (Français)	DESCRIPCIÓN (español)	MATERIAL (español)
1	CREPINE	ACIER INOXYDABLE AISI 304	REJILLA	ACERO INOXIDABLE AISI 304
2	CAGE D'ASPIRATION	ACIER INOXYDABLE AISI 304	CUERPO DE ASPIRACION	ACERO INOXIDABLE AISI 304
3	JOINT	ACIER INOXYDABLE AISI 304	ACOPLAMIENTO	ACERO INOXIDABLE AISI 304
4	BAGUE D'USURE	CAOUTCHOUC	ANILLO DE DESGASTE	GOMA
5	ROUE	ACIER INOXYDABLE AISI 304	IMPULSOR	ACERO INOXIDABLE AISI 304
6	CONE	ACIER INOXYDABLE AISI 304	CONO	ACERO INOXIDABLE AISI 304
7	BAGUE	ACIER INOXYDABLE AISI 304	ANILLO HEXAGONAL	ACERO INOXIDABLE AISI 304
8	DIFFUSEUR	ACIER INOXYDABLE AISI 304	DIFUSOR	ACERO INOXIDABLE AISI 304
9	COUSSINET	CAOUTCHOUC	COJINETE	GOMA
10	ABRE POMPE	ACIER INOXYDABLE AISI 304	EJE DE BOMBA	ACERO INOXIDABLE AISI 304
11	N. 8 VIS POUR DIFFUSEUR	ACIER INOXYDABLE AISI 304	N. 8 TORNILLOS DIFUSOR	ACERO INOXIDABLE AISI 304
12	RING	ACIER INOXYDABLE AISI 304	ANILLO EN ACERO	ACERO INOXIDABLE AISI 304
13	VIS RING	ACIER INOXYDABLE AISI 304	TORNILLO POR ANILLO EN ACERO	ACERO INOXIDABLE AISI 304
14	CONTRESUSPENSION	PTFE + 25% GRAPHITE	CONTRA-SUSPENCION	PTFE + 25% GRAPHITE
15	O-RING	CAOUTCHOUC	ANILLO TORICO	GOMA
16	GASKET VALVE	CAOUTCHOUC	JUNTA DE VALVULA	GOMA
17	PLAT	ACIER INOXYDABLE AISI 304	VALVULA	ACERO INOXIDABLE AISI 304
18	CORPS DE VALVE	ACIER INOXYDABLE AISI 304	CUERPO DE IMPULSION	ACERO INOXIDABLE AISI 304
19	JOINT ETANCHEITE CONTREBRIDE	CAOUTCHOUC	JUNTA CONTRE-BRIDA	GOMA
20	CONTREBRIDE	ACIER INOXYDABLE AISI 304	CONTRE-BRIDA	ACERO INOXIDABLE AISI 304
21	N. 8 VIS POUR CONTREBRIDE	ACIER INOXYDABLE AISI 304	N. 8 TORNILLOS CONTRE-BRIDA	ACERO INOXIDABLE AISI 304
22	N. 8 ECROU POUR CONTREBRIDE	ACIER INOXYDABLE AISI 304	N. 8 TUERCAS CONTRE-BRIDA	ACERO INOXIDABLE AISI 304
23	N.2 VIS POUR CREPINE	ACIER INOXYDABLE AISI 304	N. 2 TORNILLOS REJILLA	ACERO INOXIDABLE AISI 304
24	BRIDE INFERIEURE	ACIER INOXYDABLE AISI 304	GRAPA INFERIOR	ACERO INOXIDABLE AISI 304
25	BRIDE SUPERIEURE	ACIER INOXYDABLE AISI 304	GRAPA SUPERIOR	ACERO INOXIDABLE AISI 304
26	PROTECTOR CABLE	ACIER INOXYDABLE AISI 304	PARACABLE	ACERO INOXIDABLE AISI 304

14 BIS

CONTROSOSPENSIONE SPECIALE PER POMPE 8" / 10" / 12", FINO A 2 STADI — PTFE +25 CARBONE
SPECIAL SUSPENSION FOR PUMPS 8" / 10" / 12", UP TO 2 STAGES — *PTFE + 25 CARBON*
CONTRE SUSPENSION SPÉCIALE POUR POMPES 8" / 10" / 12", JUSQU'À 2 ÉTAGES — PTFE + 25% GRAPHITE
SUSPENSIÓN ESPECIAL PARA BOMBAS 8" / 10" / 12", HASTA 2 ETAPAS — *PTFE + 25% GRAPHITE*

PANELLI®

italian excellence since 1906

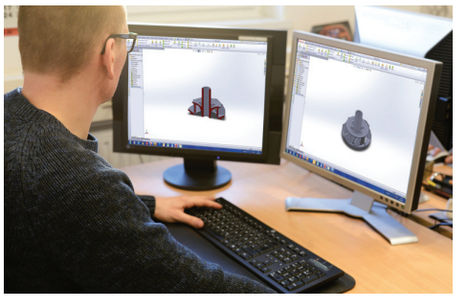

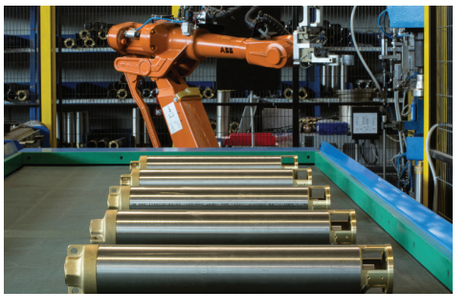

UNIONCAMERE

Camera di Commercio Alessandria

Certificato di iscrizione nel

Registro delle Imprese Storiche

rilasciato all'impresa

Panelli Srl

costituita nel 1906

Il Presidente di Unioncamere Ferruccio Dardanello

Il Presidente della Camera di Commercio di Alessandria Piero Martinotti

Alessandria, 2 dicembre 2012

Panelli s.r.l.
Sede legale: 37047 San Bonifacio (VR) ITALY - Via E. Fermi, 7
Unità produttiva: 15122 (Alessandria) ITALY
Via Rana , 63/65 – Z.I D5 - Spinetta Marengo
Phone : + 39 0131 619506 - Fax : + 39 0131 619017
Email : info@panellipumps.it - www.panellipumps.it
Società soggetta a direzione e coordinamento di
PEDROLLO GROUP s.r.l.