SERIES

MULTIROTOR

High Pressure Pump

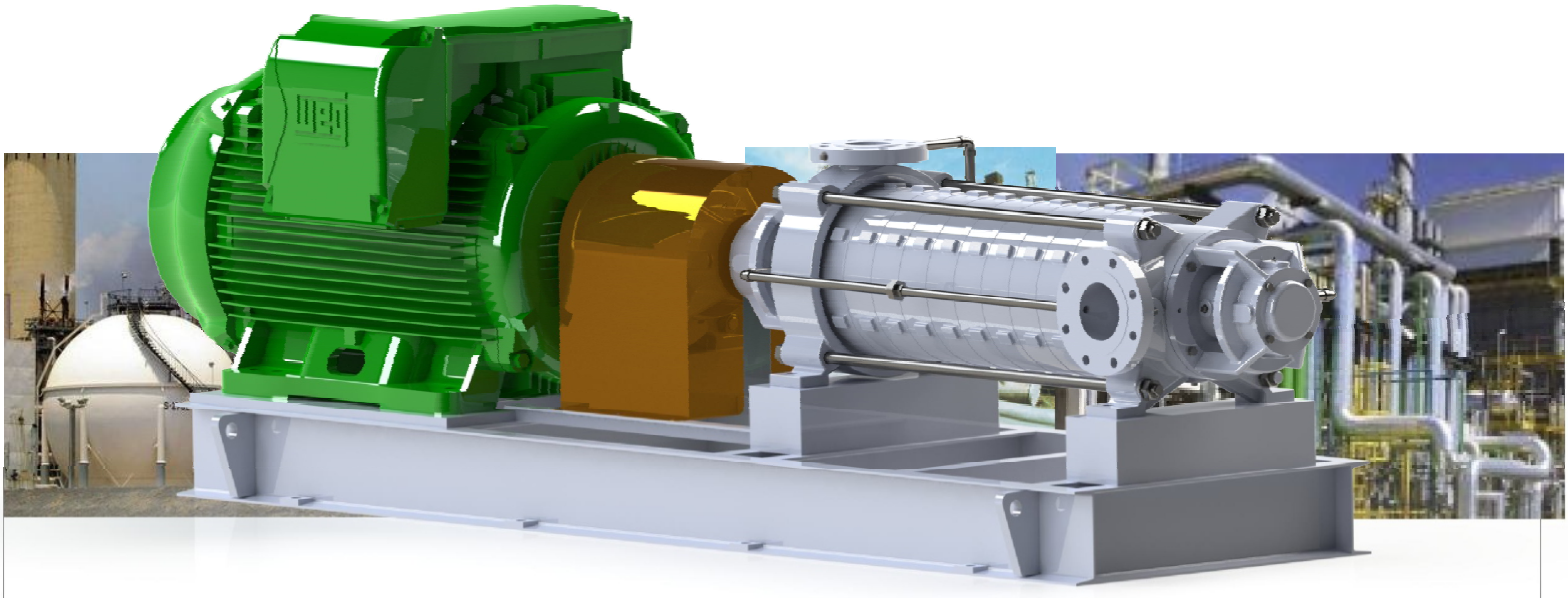

Multistage Pump
Radially Split

IMBIL®

Soluções em Bombeamento

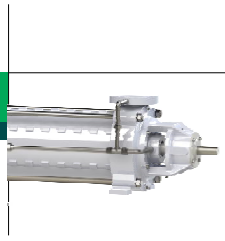

INTRODUCTION

In this catalogue are described the entire range of pump models from the series **MULTIROTOR** produced by our company.

It contains technical information about construction, application, project, particular features, dimensional drawings and curves from each model.

ADDITIONAL INFORMATION

For questions about products and services, IMBIL and its distributors will always be at your disposal to supply any additional information and to offer technical assistance.

NOTE

MULTIROTOR - 65/x - 1 . 2

- SERIE — MULTIROTOR
- Ø Nominal Discharge (mm) — 65
- Nº Stages — x
- Mechanical Project — 1
- Hydraulic — 2

Multirotor Pump

HIGH PRESSURE

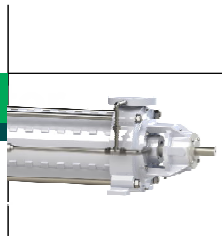

IMBIL®
Soluções em Bombeamento

Oil and Gas

Pulp and Paper

Sugar and Alcohol

Food Industry

Sanitation

Irrigation

Chemical / Petrochemical

Textile

Fire Fighting

Distilleries

HIGH PRESSURE PUMPS

Flow up to 300 m^3/h
Head up to 600 m.c.a

The Multirotor line of centrifugal pumps is engineered to meet applications in boiler feeding, condensate, water supply in general, fire fighting systems, hot water, elevation of pressure, irrigation, distillation, solvents and lubricants.

Our robust bearing design incorporates significant advances in cooling and lubricating technology, which provides the maximum reliability and longevity of the bearing.

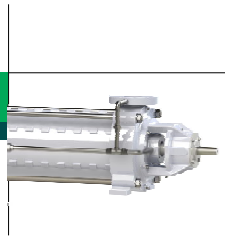

APPLICATION CHART

MULTIROTOR 3500rpm

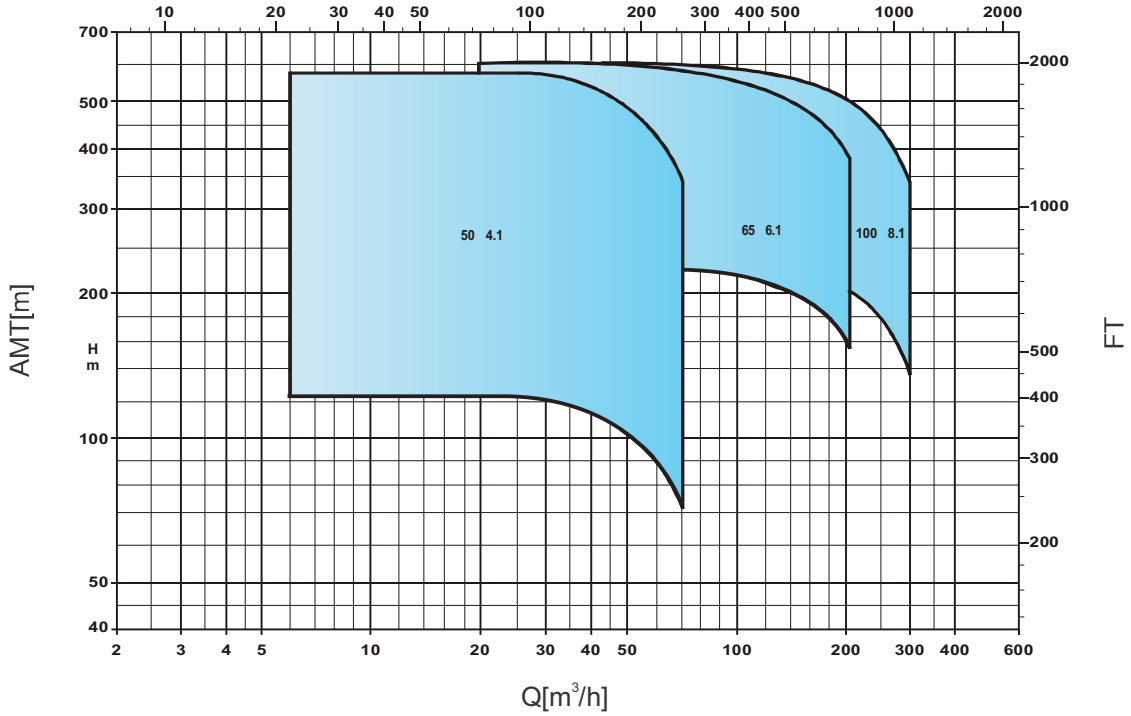

MULTIROTOR 1750rpm

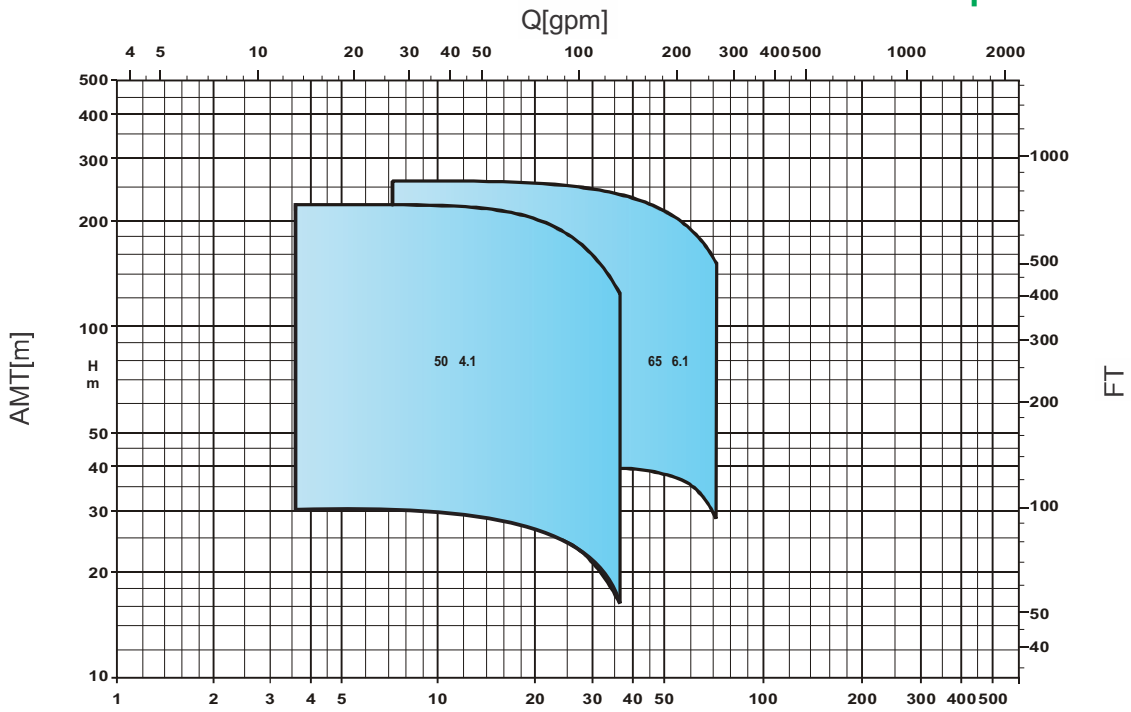

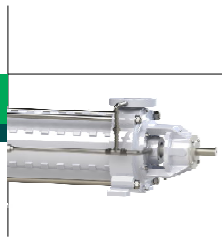

IMBIL®
Soluções em Bombeamento

DESIGN TECHNOLOGY

Hydraulic project

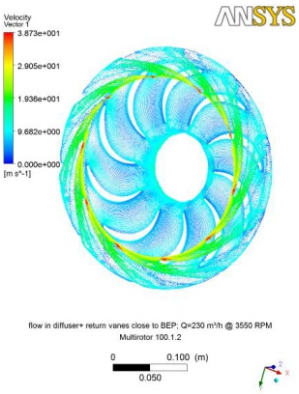

Developed using computational fluid, CFD is a tool that allows prediction of pump performance before it even exists with a small margin of error and the possible to build prototypes that produce the expected results in a much more effective and efficient.

Hydraulic engineering

Hydraulic Coverage searches specific fields for process application to maximize its efficiency and reliability.

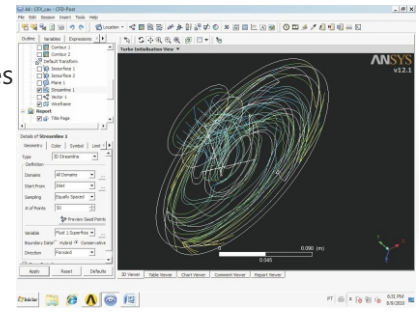

Discharge Casing

Constructive project of the discharge casing, where last stage rotor and diffuser are aligned, greatly reducing hydraulic losses; thus ensuring better performance.

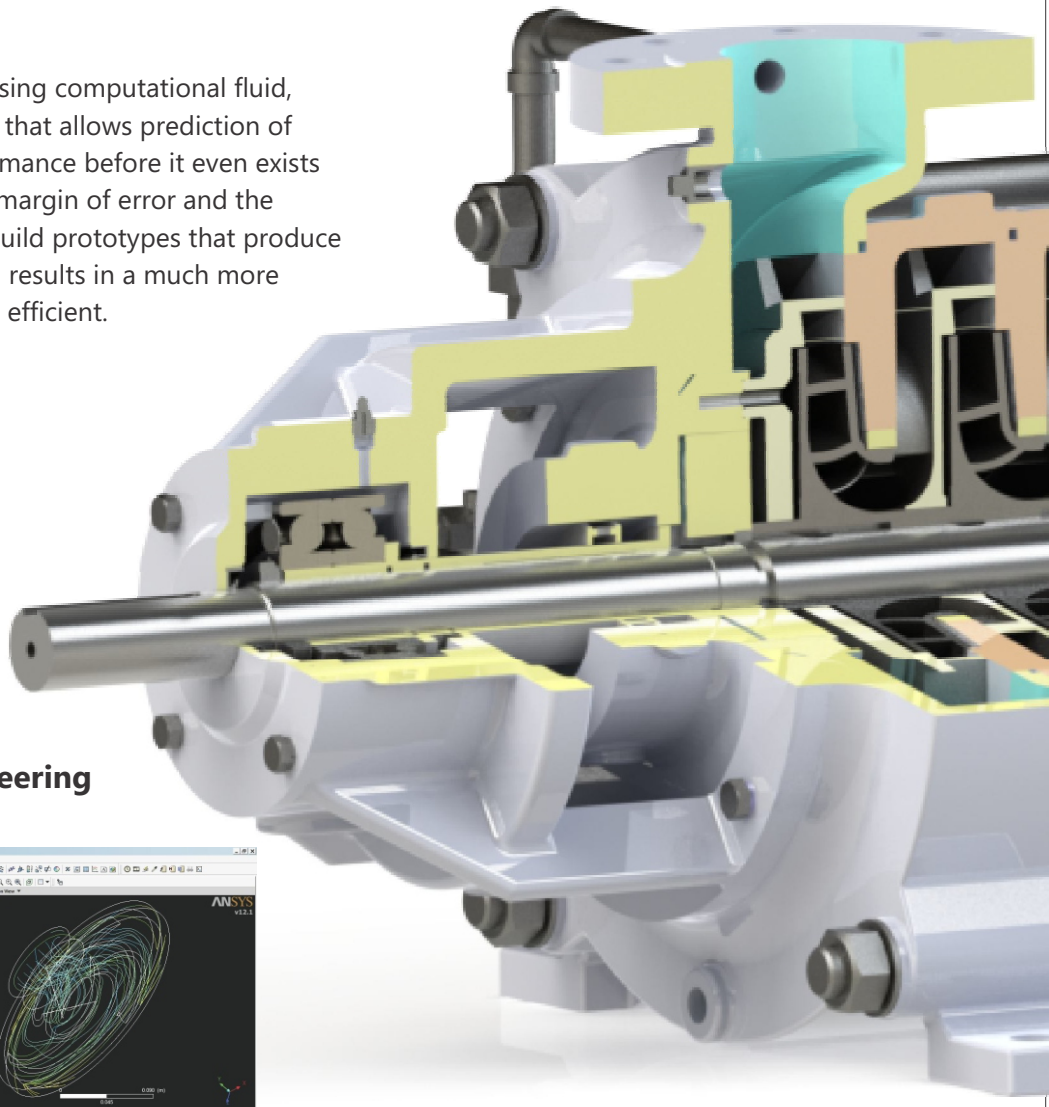

Drum Balancing

Self-netting device that reduces axial thrust.

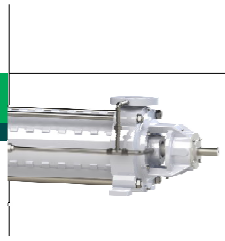

FEATURES AND BENEFITS

Diffuser Open diffuser which efficiently keeps fluid passage and improves radial loads.

Impeller is dynamically balanced to decrease thevibration, achieving proper operation over a wide range of flow.

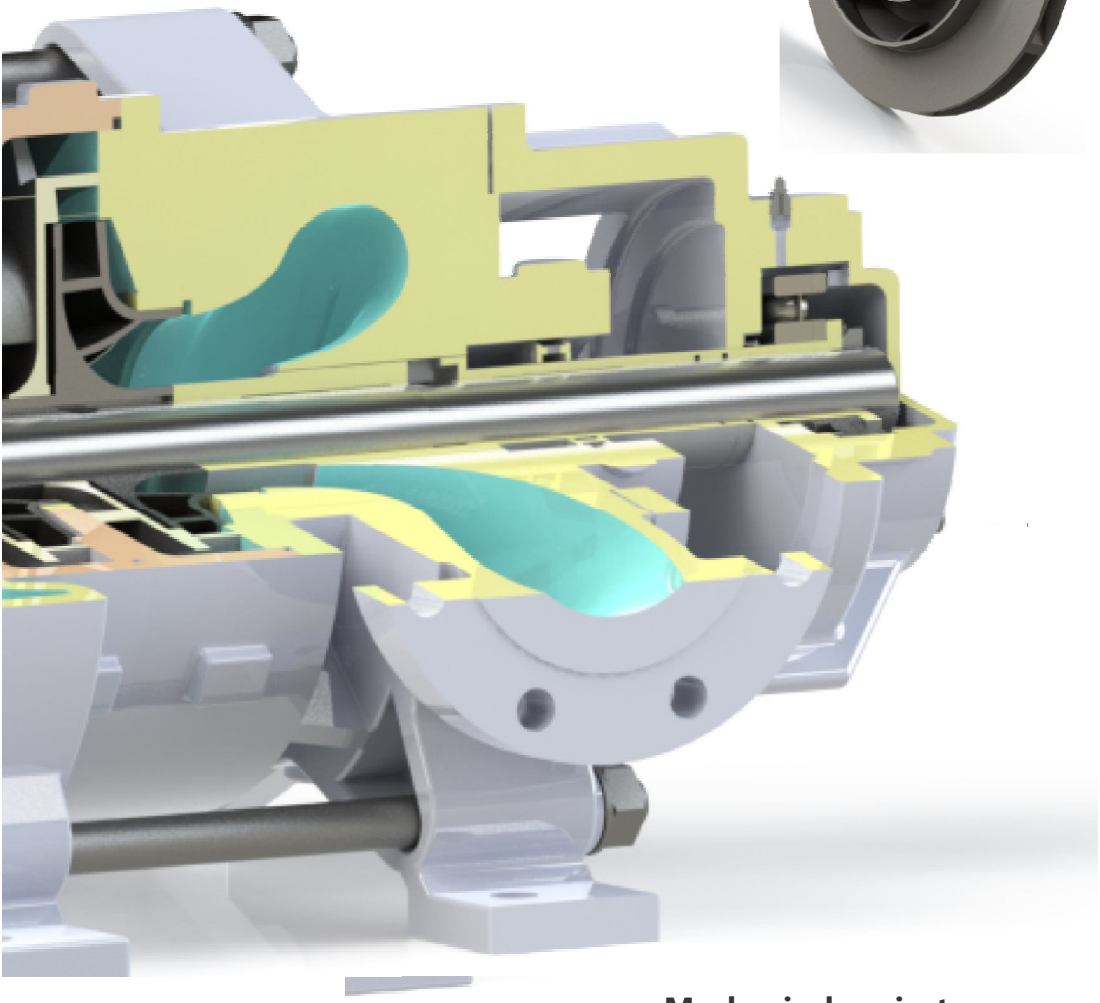

Mechanical project

Developed with vanguard engineering tools (CAE): rotodynamic analysis, finite element structures whichdetermines the natural frequencies and the ranges of operation permitted and preferred.

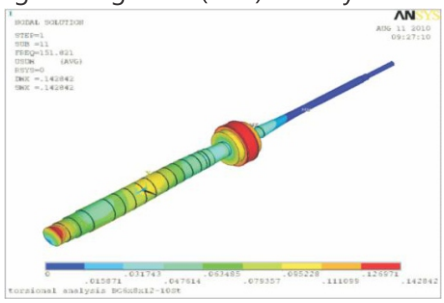

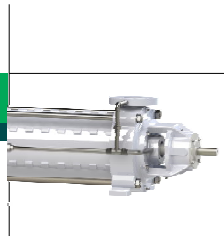

TECHNICAL DATA

PUMP SIZE		UNID	50	65	100
HYDRAULIC ENGINEERING			2	2	2
Rotor Ø max		mm	173	214	245
Number of Stages	to 1750 rpm	--	15	11	11
	to 3500 rpm	--	10	6	5
RPM allowable / material	A48CL30	RPM	4 000		3660
	A 743 CF 8M	RPM	4000		
Maximum discharge pressure (shut-off)		bar	50		
Temperature minimum/maximum		°C	-10 to +140 (on the suction pressure of 15 bar)		
			10 to + 140		
Bearing Lubrication		--	grease (optional oil)		
p/n Maximum (CV/RPM)		--	0,0523	0,0697	0,15
		--	0,0846	0,1128	0,2426
		--	0,0738	0,0984	0,2118

DIMENSIONAL DRAWING

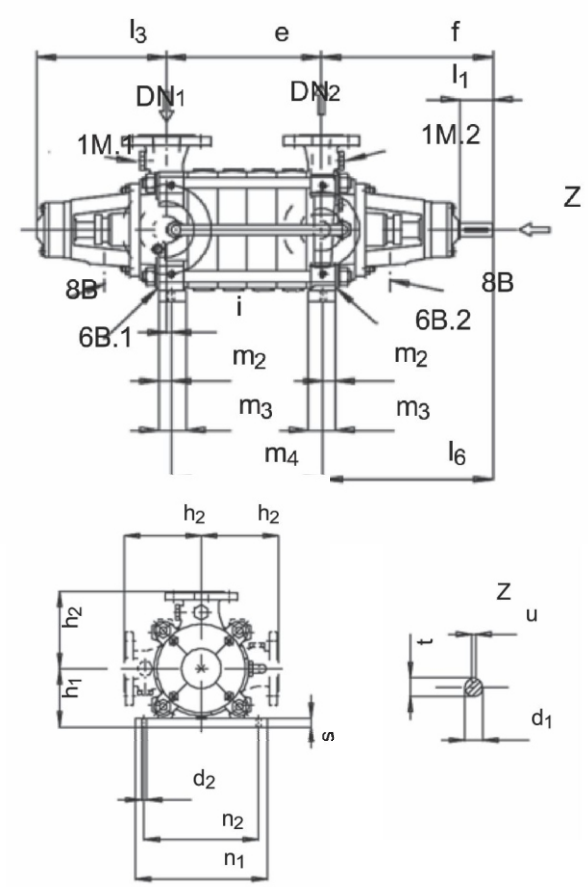

mm

	Nº of Stage	DN1	DN2	a	d1k7	d2	e	f	f1	h1	h2	i	l1	l2	l3	l4	l5	l6	m2	m3	m4	n1	n2	s
50	2	80	50	190 *)	28	16	151	350	338	150	200	18	61	262	250	356	57 *)	355	20	40	128	330	290	20
	3	80	50	252 *)	28	16	213	350	338	150	200	18	61	262	250	356	57 *)	355	20	40	190	330	290	20
	4	80	50	314 *)	28	16	275	350	338	150	200	18	61	262	250	356	57 *)	355	20	40	252	330	290	20
	5	80	50	376 *)	28	16	337	350	338	150	200	18	61	262	250	356	57 *)	355	20	40	314	330	290	20
	6	80	50	438 *)	28	16	399	350	338	150	200	18	61	262	250	356	57 *)	355	20	40	376	330	290	20
	7	80	50	500 *)	28	16	461	350	338	150	200	18	61	262	250	356	57 *)	355	20	40	438	330	290	20
	8	80	50	562 *)	28	16	523	350	338	150	200	18	61	262	250	356	57 *)	355	20	40	500	330	290	20
	9	80	50	624 *)	28	16	585	350	338	150	200	18	61	262	250	356	57 *)	355	20	40	562	330	290	20
	10	80	50	686 *)	28	16	647	350	338	150	200	18	61	262	250	356	57 *)	355	20	40	624	330	290	20
	11	80	50	748 *)	28	16	709	350	338	150	200	18	61	262	250	356	57 *)	355	20	40	686	330	290	20
	12	80	50	810 *)	28	16	771	350	338	150	200	18	61	262	250	356	57 *)	355	20	40	748	330	290	20
	13	80	50	872 *)	28	16	833	350	338	150	200	18	61	262	250	356	57 *)	355	20	40	810	330	290	20
	14	80	50	934 *)	28	16	895	350	338	150	200	18	61	262	250	356	57 *)	355	20	40	872	330	290	20
	15	80	50	996 *)	28	16	957	350	338	150	200	18	61	262	250	356	57 *)	355	20	40	934	330	290	20
65	2	100	65	247	32	20	189	393	380	190	225	18	82	303	291	399	77	394	30	60	169	405	365	25
	3	100	65	326	32	20	268	393	380	190	225	18	82	303	291	399	77	394	30	60	248	405	365	25
	4	100	65	405	32	20	347	393	380	190	225	18	82	303	291	399	77	394	30	60	327	405	365	25
	5	100	65	484	32	20	426	393	380	190	225	18	82	303	291	399	77	394	30	60	406	405	365	25
	6	100	65	563	32	20	505	393	380	190	225	18	82	303	291	399	77	394	30	60	485	405	365	25
	7	100	65	642	32	20	584	393	380	190	225	18	82	303	291	399	77	394	30	60	564	405	365	25
	8	100	65	721	32	20	663	393	380	190	225	18	82	303	291	399	77	394	30	60	643	405	365	25
	9	100	65	800	32	20	742	393	380	190	225	18	82	303	291	399	77	394	30	60	722	405	365	25
	10	100	65	879	32	20	821	393	380	190	225	18	82	303	291	399	77	394	30	60	801	405	365	25
	11	100	65	958	32	20	900	393	380	190	225	18	82	303	291	399	77	394	30	60	880	405	365	25
100	2	125	100	306	40	26	233	472	463	235	275	30	110	339	329	492	103	462	35	70	213	504	450	30
	3	125	100	396	40	26	323	472	463	235	275	30	110	339	329	492	103	462	35	70	303	504	450	30
	4	125	100	486	40	26	413	472	463	235	275	30	110	339	329	492	103	462	35	70	393	504	450	30
	5	125	100	576	40	26	503	472	463	235	275	30	110	339	329	492	103	462	35	70	483	504	450	30
	6	125	100	666	40	26	593	472	463	235	275	30	110	339	329	492	103	462	35	70	573	504	450	30
	7	125	100	756	40	26	683	472	463	235	275	30	110	339	329	492	103	462	35	70	663	504	450	30
	8	125	100	846	40	26	773	472	463	235	275	30	110	339	329	492	103	462	35	70	753	504	450	30
	9	125	100	936	40	26	863	472	463	235	275	30	110	339	329	492	103	462	35	70	843	504	450	30
	10	125	100	1026	40	26	953	472	463	235	275	30	110	339	329	492	103	462	35	70	933	504	450	30
	11	125	100	1116	40	26	1043	472	463	235	275	30	110	339	329	492	103	462	35	70	1023	504	450	30

Multirotor Pump

HIGH PRESSURE

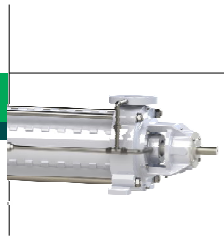

IMBIL®
Soluções em Bombeamento

EMPRESA 100% NATIONAL

AREA 120.000M²

IMBIL - Pumping Solutions.

Acting in the Global Pump Market, IMBIL - Industry and Maintenance of Pumps ITA LLC, is located in the city of Itapira - São Paulo, covering an area of 120.000 square meters.

It has advanced technological resources, practices modern management and engineering techniques and stimulates a continuous development of skills, abilities and attitudes of employees.

The Quality Management System is certified to international standard ISO 9001 - 2000 by Bureau Veritas Certification.

Currently IMBIL accelerates the development of its Integrated Social and Environmental Management.

The Commercial, Administrative and Industrial functions are fully interconnected by Business Management software in a fiber optic and wireless network connecting more than one hundred stations.

Supported by two own foundries and model-making facilities, IMBIL is selfsufficient in the production of its castings, applying a wide range of materials, especially those resistant to abrasion and corrosion.

The Lean Manufacturing philosophy, that aims to reduce the time between order placement and shipment of the product, results not only in shorter lead times but also in greater flexibility.

We offer an adequate and personalized After Sales serviec, from support in the Start-Up phase to integral equipment maintenance, and yet, as per the Service Contract, operate Pumping Installations in the Sugar&Ethanol, Steel and Mining Industries and industrial plants in general.

All this human, technological and financial resources are driven by the IMBIL MISSION: “Providing Pumping Solutions and related services, attending the needs and expectations of its customers in the Global Market and respecting the ethical principles that govern its relations with employees, partners, environment and society”.