PENTAIR
FAIRBANKS NIJHUIS

DOUBLE SUCTION SPLIT CASE PUMPS

Model VENUS, VENUS-V

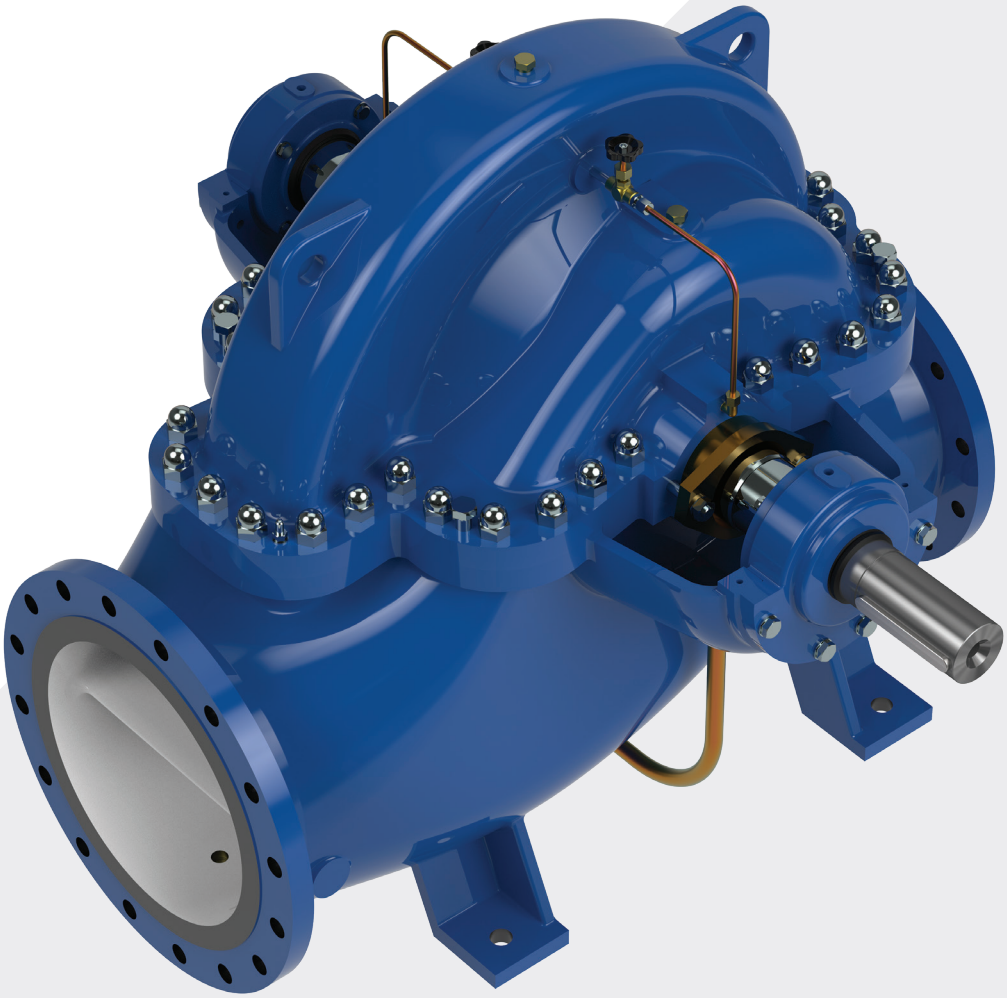

DOUBLE SUCTION SPLIT CASE PUMPS

A sustainable solution

Pentair® Fairbanks Nijhuis™ Split Case Pumps are the right choice for a wide range of applications with medium to high flow rates. Fairbank Nijhuis Split Case Pumps are optimized for high efficiency, combined with an improved suction behavior. This means the pump has superior performance in terms of efficiency, maintenance and footprint. The design also helps ensure low vibration levels, which greatly improves durability. Altogether, the Fairbanks Nijhuis Split Case Pump is a sustainable solution with low maintenance requirements.

To better meet your specific application requirements, we can manufacture the pump in a wide range of materials. For installation flexibility, Fairbanks Nijhuis Split Case Pumps are available in both horizontal and vertical configuration. There are also many options for shaft sealing, bearing and lubrication. The standard pump range is available for a wide range of flows and discharge heads. Customized solutions for flow rates outside the standard range are also available.

Applications:

- Municipal
- HVAC
- Maritime and dredging
- Irrigation
- Flood control
- Desalination
- Industrial water
- Fire protection

EFFICIENT AND EFFECTIVE CUSTOMIZED SOLUTIONS

The best performance for your pump application

For optimized pump operation, low operational costs and minimum down time, the system design and pump must match. Pentair Research & Development Engineers will support you in optimizing your pump system. Rely on over a century of pump expertise and experience for:

- System analysis (e.g. calculation dynamic loss)
- Surge analysis, water hammer calculations
- CFD for suction intake basin
- Optimizing pump/system operation
- Pump model test
- Sump model test

To help ensure the pump operation matches the network system, we can modify our pump designs to meet the requirements of each individual system. This helps to result in the best overall system performance for your specific pump application.

Benefit from:

- Reduced energy consumption
- Low operational costs
- Extended service life and durability
- Low vibration and noise levels

We understand the importance of your project deadlines and work to design your customized solutions efficiently and effectively to help meet them. Design modification can range from minor changes like reshaping the impeller, to a dedicated design for a specific application. Based on our vast experience, engineering knowledge and advanced design programs, we can accurately predict hydraulic performance.

In addition, we subject all designs to structural analysis to check the results of our performance calculations. Design verification occurs in our test facility where we also test the pumps for performance. For very large pumps, either we test a scale model or we conduct extensive on-site measurements using our calibrated instrumentation. Consider a customized solution as your valuable and sustainable option when selecting your pumps.

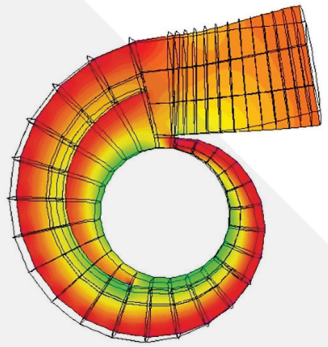

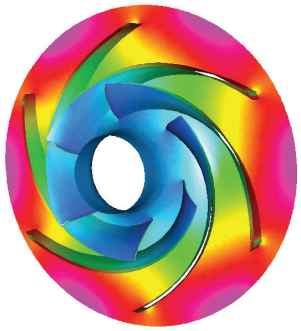

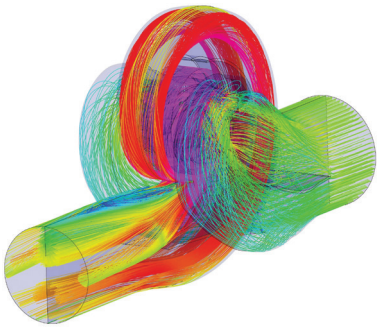

PUMPS WITH BENEFITS

Highly efficient, durable and easy to maintain

High efficiency / Low energy costs

Pentair® Fairbanks Nijhuis™ Split Case Pumps have optimized impeller and pump casing shape to achieve your ideal efficiency for the specific design flow rate and pressure head. Plus our advanced deviating design features give each pump a wide operating range, without exceeding cavitation limits.

Ease of maintenance / Minimum down time

For better maintenance convenience, you can remove the upper half without dismantling pipe connections and driver components so that the alignment is not disturbed. Pentair Service Department is ready to support you with cost-effective services and maintenance contracts. Help ensure your pumping installation downtime is kept to a minimum with these smart designs and our helpful hand.

Durability / Low vibration and noise levels

Through double suction impellers and double volute casings, you and your customers can experience split case pumps with low vibration and noise levels. A double volute reduces radial thrust, resulting in longer service life for bearings and seals. On your request, we can supply staggered impeller vanes for extremely low vibration levels.

Wide material options according to international standards

Because some applications require manufacturing pumps or parts in specified material, you can select your split case pumps in a wide range of materials. These materials are both ASTM standard and ISO standard:

- Cast iron
- Ductile cast iron
- Bronze
- Nickel aluminum bronze
- Stainless steel
- (Super) duplex stainless steel
- Other materials on request

The pump shaft is standard made of high strength corrosion resistant material (DIN 1.4122). For other requirements, we will make the shaft from either Duplex Stainless Steel or Super Duplex Stainless Steel. Both internally and externally a wide range of coating systems are available in accordance with ISO 12944-2.

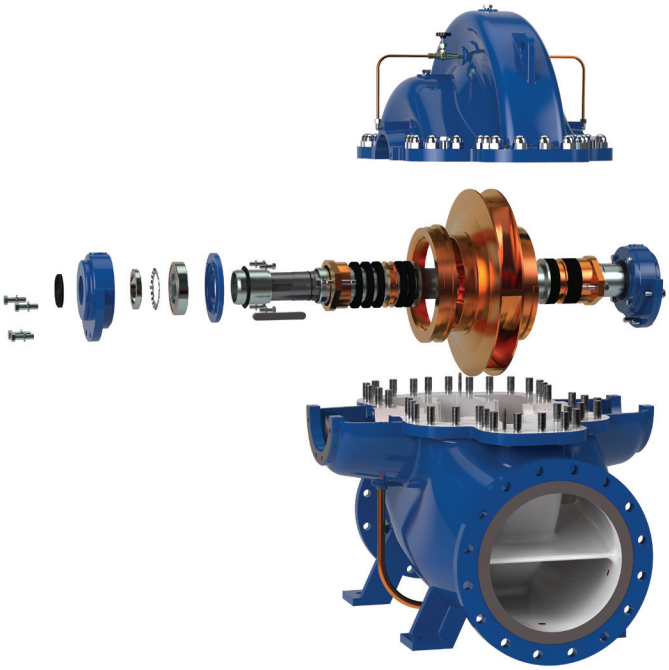

Exploded view horizontal split case pump

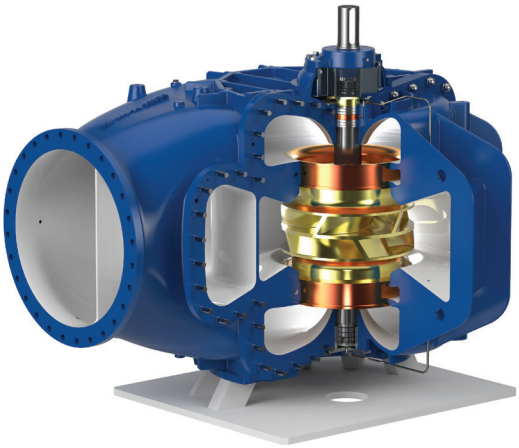

Vertical configuration of the split case pump

DOUBLE SUCTION SPLIT CASE PUMPS

A sustainable solution

The selection charts show the current Pentair® Fairbanks Nijhuis™ Split Case Pump range on different pump speeds from 3000 to 500 RPM. The complete range currently has 45 pump models.

The standard capacity range of Fairbanks Nijhuis Split Case Pumps varies between 90 and 13,000 m3/h (396 - 57,237 GPM). On your request, we can realize higher capacities. The standard pump head varies between 5 and 250 mlc (16 - 820 feet). Detailed pump curves are also available upon request. To help you select with confidence, our experts can also assist you in selecting the optimum pump for your application and operating range.

PUMP SELECTION CHART

Pumptype: VENUS1, HGTF1, HGT1, HGTFD1
Rated speed [1/min]: 1500, 1000, 750, 600, 500, 428 RPM

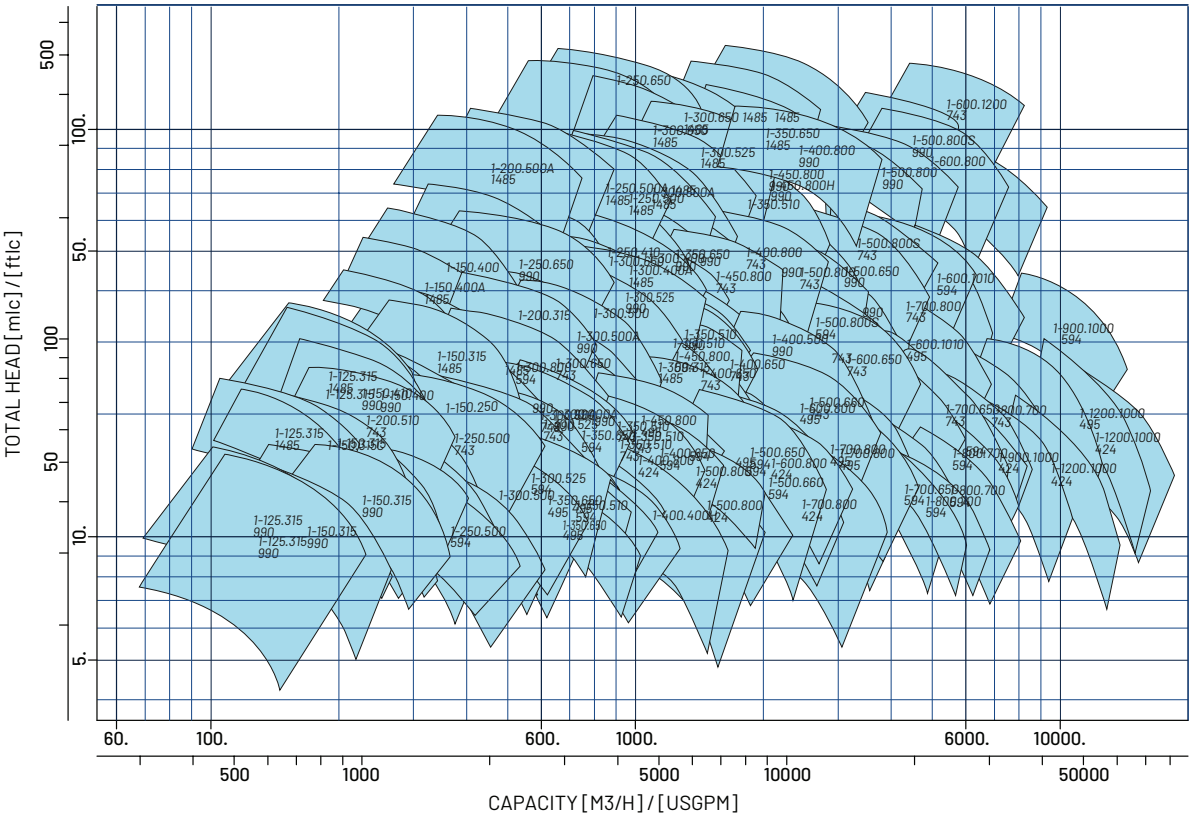

PUMP SELECTION CHART

Pumptype: VENUS1, HGTF1, HGT1, HGTFD1
Rated speed [1/min]: 1800, 1200, 900, 720, 600, 514, 450, 400 RPM

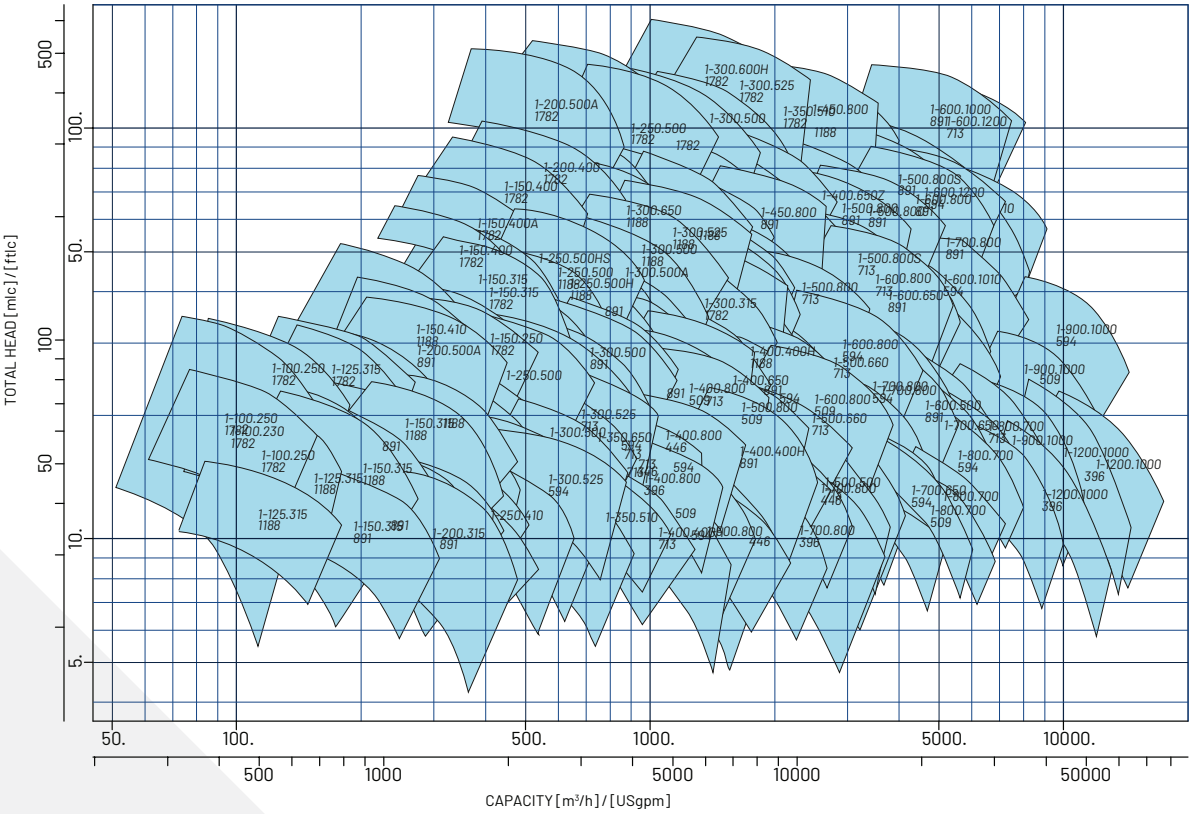

HORIZONTAL CONFIGURATION

A variety of shaft seal configurations

The selection of shaft seals depends on the operating conditions and composition of the fluid handled. We can advise you on the correct configuration for your application, ensuring safe and reliable operation with minimal maintenance requirements.

- Standard soft packing with a lantern ring
- Various mechanical seals, unbalanced (pusher type or rubber bellow type seal) or balanced (metal bellow, cartridge type or engineered seal). For seal flushing, several options are available matching API 682/ISO 21049
- Various options like Liquidyne® or lip seals*

Bearings

The bearings are easily accessible for inspection and maintenance. The standard configuration is grease lubricated anti-friction bearings. Optionally oil lubricated (oil bath) anti-friction bearings can be installed. For the larger pump models, the standard configuration is the oil bath lubrication. The design of the Pentair® Fairbanks Nijhuis™ Split Case Pump Series Bearing has a minimum life of 50.000 hours.

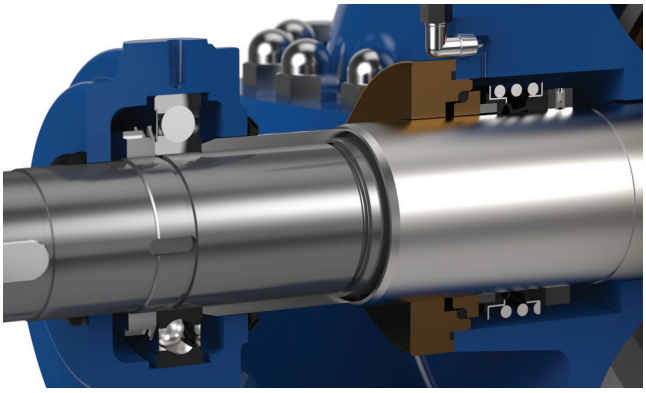

Oil lubricated bearing with a mechanical seal

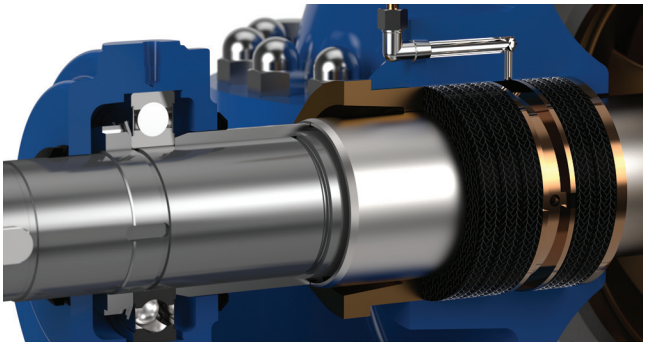

Grease lubricated bearing with a soft packing

VERTICAL CONFIGURATION

Fairbanks Nijhuis Split Case Pumps are also available in a vertical configuration. This decreases the footprint when space is limited. The motor will be installed either directly on the pump (frame) or on a second motor floor. In this configuration, a spacer shaft or cardan-shaft will be installed between the pump and the electric motor. If distance between the pump and the motor is required, a grease lubricated intermediate bearing will be installed.

A variety of shaft seal configurations

The selection of shaft seals is identical to the horizontal configuration and depends on the operating conditions and composition of the fluid handled.

Bearings

The bearings are easily accessible for inspection and maintenance. The top bearing is grease lubricated. For the larger pump models, oil bath lubrication is optionally available.

The lower bearing is a medium lubricated maintenance free design available in several construction materials like rubber, composite or silicon. In case the medium is contaminated, we will provide the flushing line with a mesh- or cyclone filter.

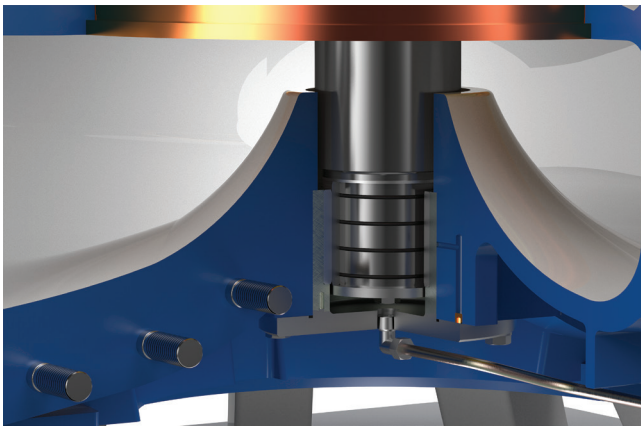

Ceramic bearing

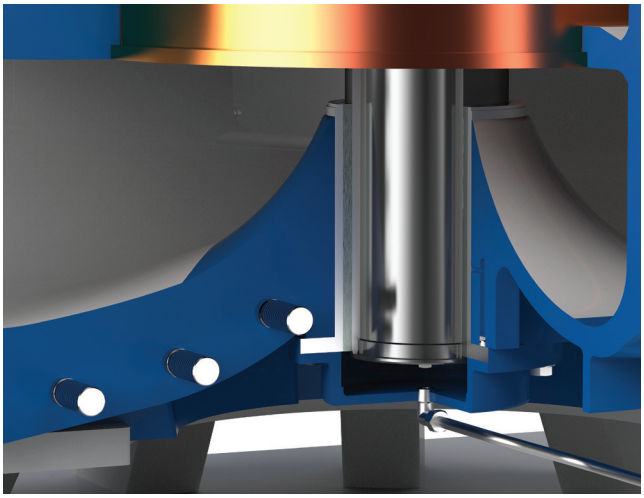

Sleeve bearing

SPECIAL OPTIONS AND INSTRUMENTATION

A wide range of special options is available such as pressure gauges, pressure sensors, temperature sensors or vibration sensors of several types and brands. You and your end customer are consulted in the selection of the brand and type of sensor applied.

*Liquidyne® is a registered trademark of Lagersmit Sealing Solutions BV. All Rights Reserved.

PUMPS IN THE FIELD

A selection of projects worldwide

Evonik - Germany

Industrial

Cooling water pumps that contribute to optimize the production process of a large chemical plant in Germany.

1 X Venus 1-300.315: 1.200 m3/hr; 25 mlc
1 x Venus 1-600.500: 6.000m3/hr; 40 mlc
7 x Venus 1-350.410: 2.000 m3/hr; 36 mlc

Shenzen - China

Municipal

Intake pumps that help deliver potable drinking water to the fastest growing city in Asia.

6 x Venus 1-900.1000: 13.500 m3/hr; 51 mlc
5 x Venus V-1200.1000: 13.500 m3/hr; 17 mlc

CPECC – Abu Dhabi

Fire protection

Firefighting pumps that help protect the most important oil supply of the United Arab Emirates - the Fujairah Habshan oil pipeline - in case of fire.

6 x VENUS1-400650 engine driven: 2268 m3/h/159 mlc/1,9MW
2x VENUS1-400650 electric driven: 2400 m3/h/148 mlc/1,7MW
8 x Venus 1-400.650: 2970 m3/hr; 102 mlc

Jan de Nul – The Netherlands

Maritime/Dredging

Dredging pumps that help support deepening fairways, spraying beaches and land reclamation.

4 X Venus 1-600.800: 6000 m3/hr; 50mlc

Ministry of Energy en Water- Kuwait

Municipal

Distribution pumps for a new pumping station that help provide potable water to the City of Kuwait.

8 x Venus 1-600.1200: 5.940 m3/hr; 120 mlc
3 x Venus 1- 400.1000: 1.908 m3/hr; 180 mlc

Water company Evides – The Netherlands

Municipal

Pumps for a pumping station that help deliver potable water to 900,000 households in The Netherlands.

6 X Venus V1-150.315: 500 m3/hr; 50 mlc
5 X Venus V1- 400.650: 2500 m3/hr; 47,5 mlc

INSIST ON PENTAIR

Skills and talents that do the job

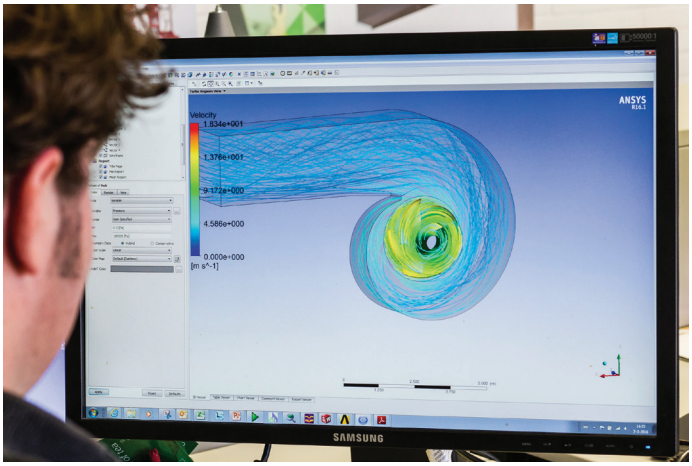

R&D and Engineering

Pentair R&D and Engineering Departments have extensive experience in the field of pump and system optimization. They work with state of the art hydraulic engineering tools, such as Turbo Pro, Turbo GRF and CFD. If you have specific needs, we can customize the impeller or pump design to meet these needs.

Inspection and Testing

Our test rig is one of the most modern of its kind. Before leaving the factory, every pump or pump set is subject to thorough inspection and testing. We offer sump model and pump model tests that measure capacity and pressure. Next to a Factory Acceptance Test, we also offer a Site Acceptance Test. This way you can rest assured knowing the pump meets your specifications.

Project Management

Large projects often come with stressful and unexpected situations. Our experienced project managers keep a close eye on the planning of your project and adapt quickly to changing circumstances. Always putting the customer first. To help ensure a good start-up of the project, you can also rely on our support with supervising during installation.

Maintenance and After Sales Service

With four workshops in The Netherlands and a worldwide network of service representatives, you can rely on a wide range of after sales services. Along with inspection, repair and (predictive) maintenance, our experienced field engineers can support you with installation and commissioning on site. Add to that the supply of original spare parts and you know that have come to the right place for support throughout the complete life cycle of your pump.

Parallelweg 4 | 7102 DE Winterswijk | The Netherlands | www.fairbanksnijhuis.pentair.com | www.pentair.com

All indicated Pentair trademarks and logos are property of Pentair. Third party registered and unregistered trademarks and logos are the property of their respective owners.
Because we are continuously improving our products and services, Pentair reserves the right to change specifications without prior notice. Pentair is an equal opportunity employer.

©2022 Pentair. All Rights Reserved.

FN13346 (08-19-22)